MOUNTING INSTRUCTION
PROVA ALU 8 & 10
FLOOR MOUNTED

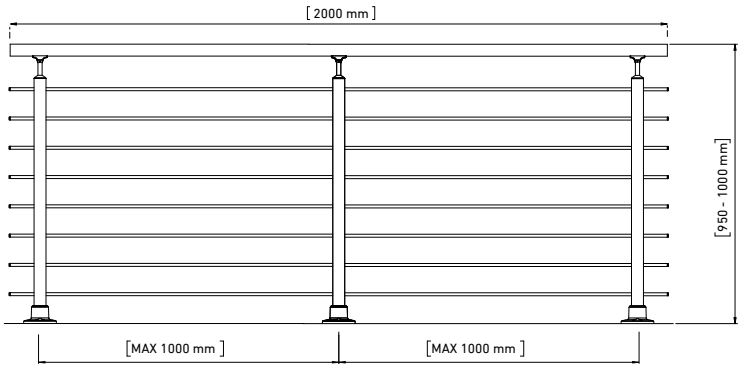

Distance between newel posts

Tube are installed facing inward towards steps or flooring

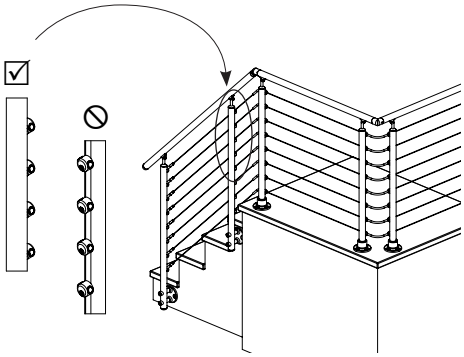

Mount the post PA1 in the floor - wood

PA22 Hexagon head screws for wood surface. PA22 screws, washers and cap for wood surfaces.
Mark drill holes using post before drilling

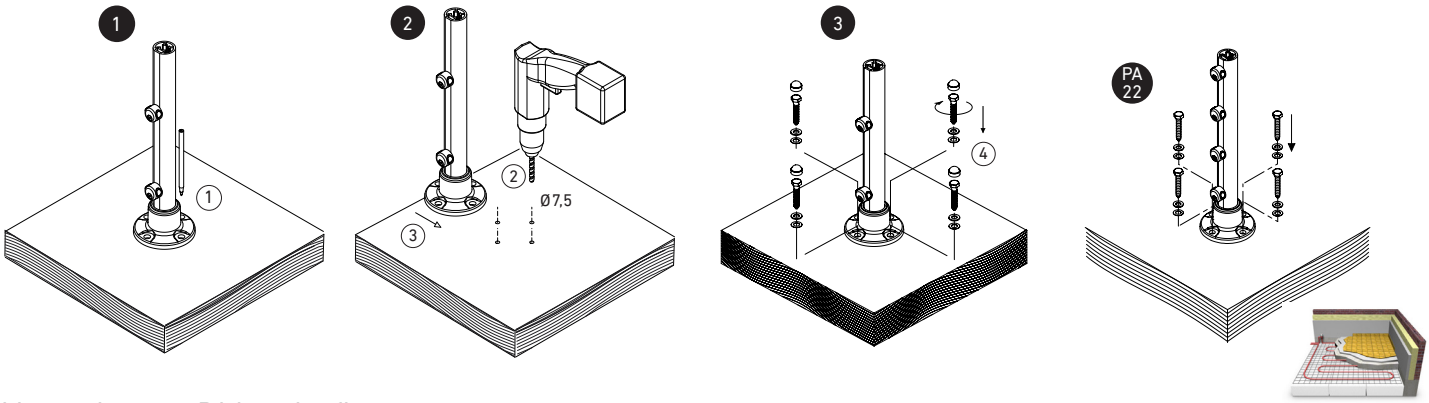

Be caution of heatfloor

Mount the post PA1 in the floor - concrete

PA23 Heavy duty anchor for concrete. PA23 anchors, washers and caps for concrete surfaces.
Mark drill holes using post before drilling

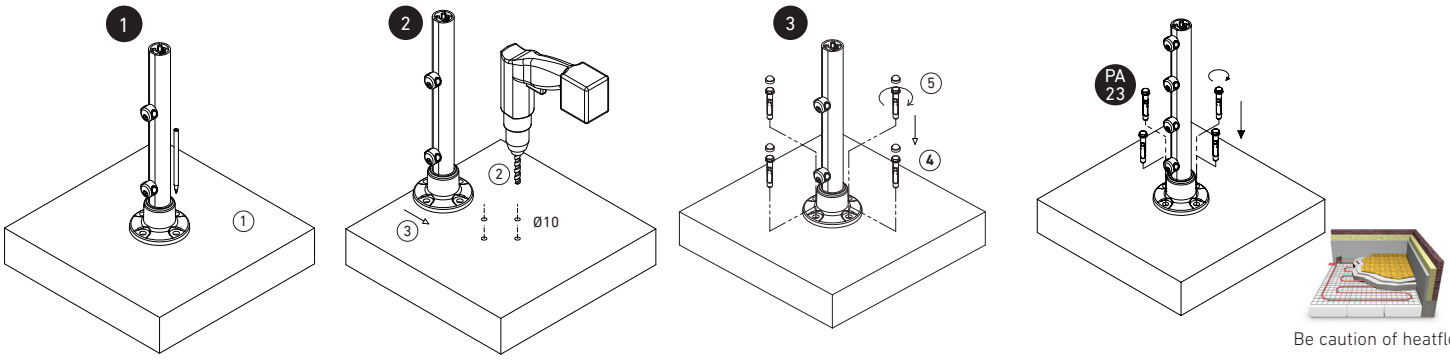

Be caution of heatfloor

Mount the stainless steel tubes on the post

PA5 Assembly of the stainless steel tubes (2 pack PA5 for Prova 10) . PA5 tubes are connected with plastic fittings supplied with the tubes.

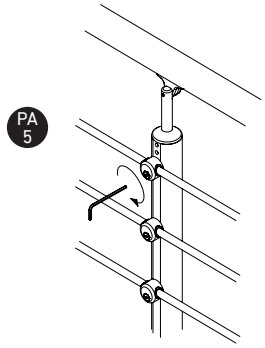

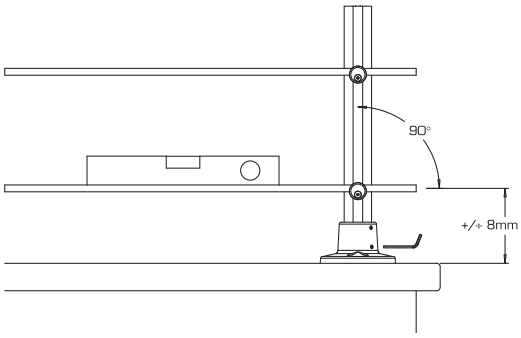

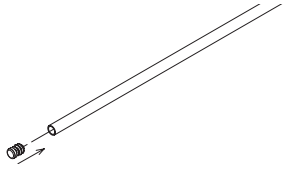

Wall connection bracket for stainless steel tubes

PA11 for ending into wall of tubes.

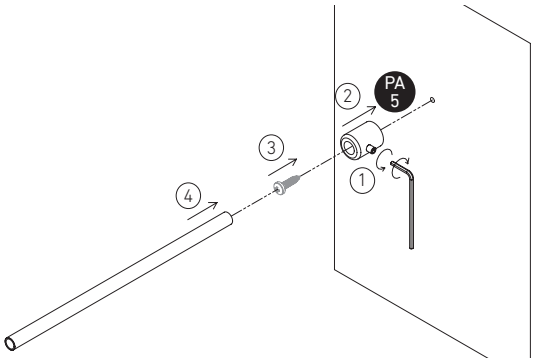

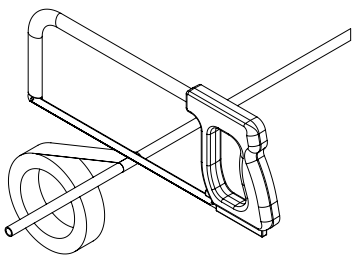

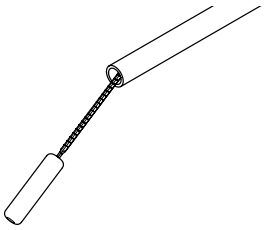

Angle juction bracket for PA5 tube

Use PA20 for corners or angles

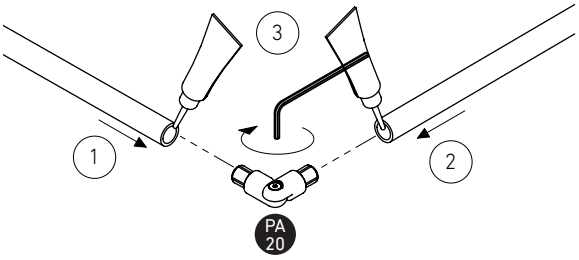

90 degree joint

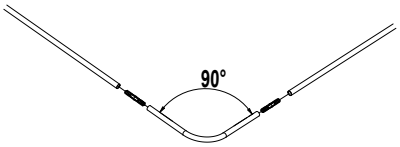

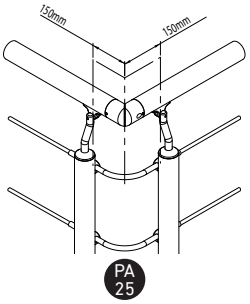

Mount the wooden handrail

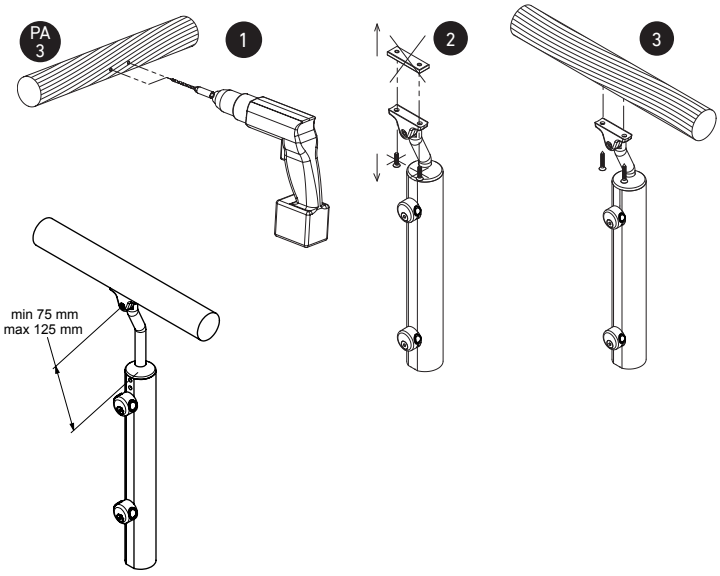

Drilling template for wooden handrail

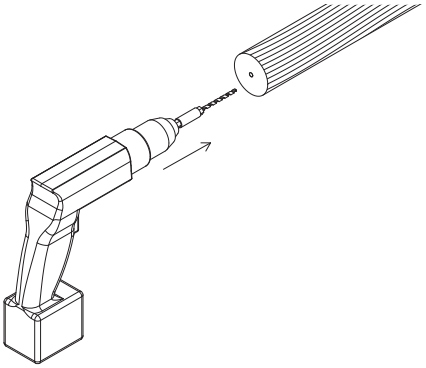

Mount the aluminium handrail

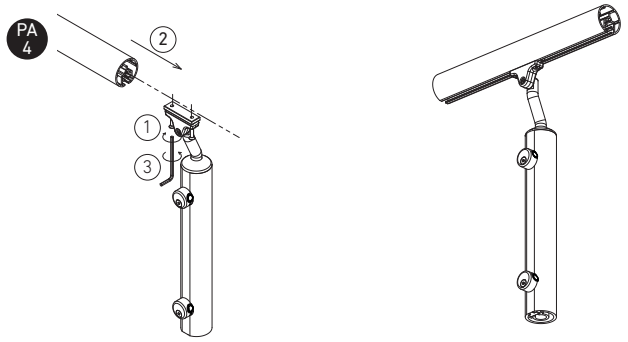

The handrails can be shortened with the help of a hacksaw. A length of tape should be wound around the place that will be sawn to ensure an attractive finish.

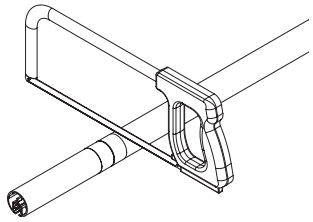

Bracket for handrail junction (wood or aluminium)

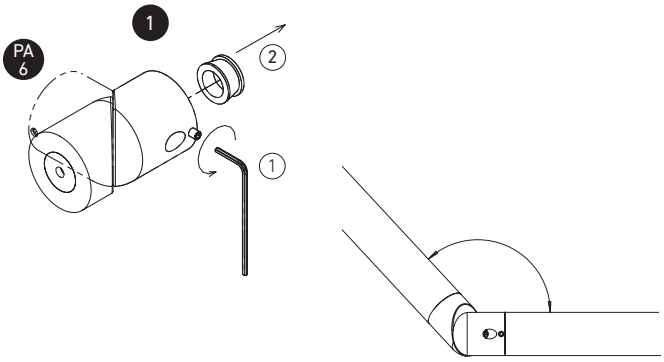

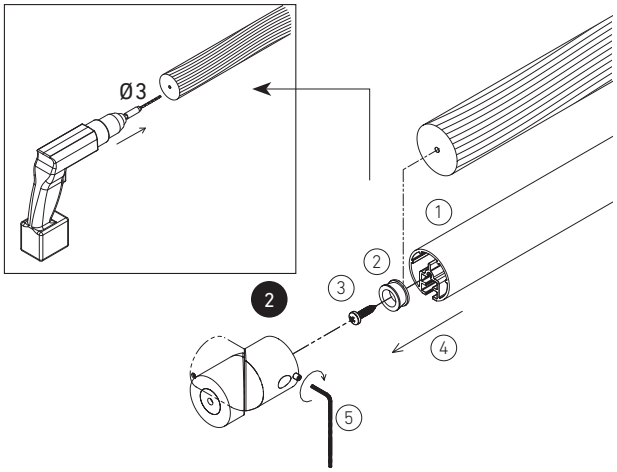

End cap for handrail (wood or aluminium)

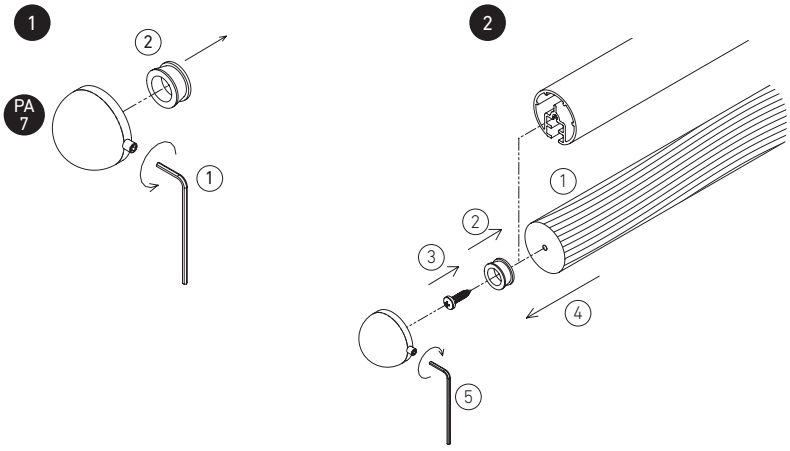

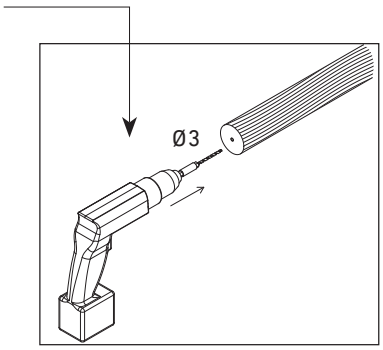
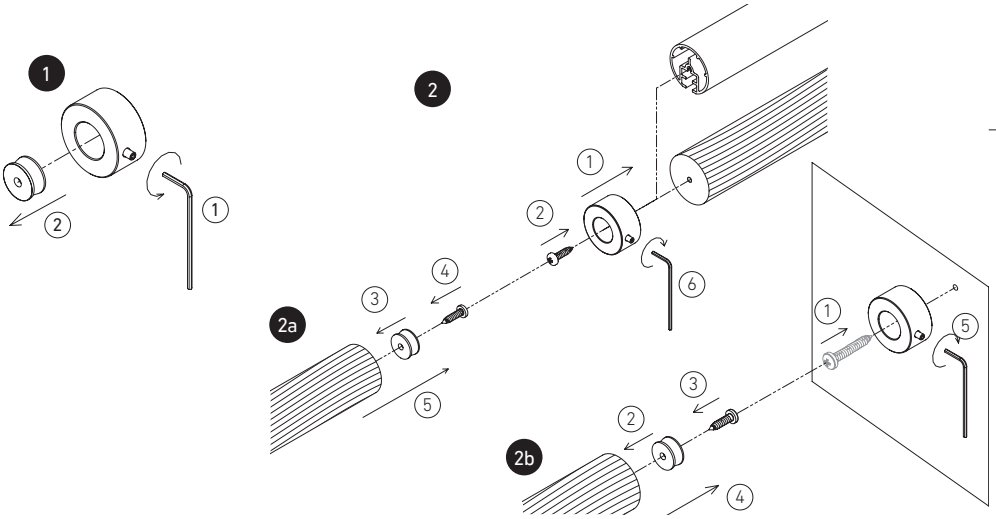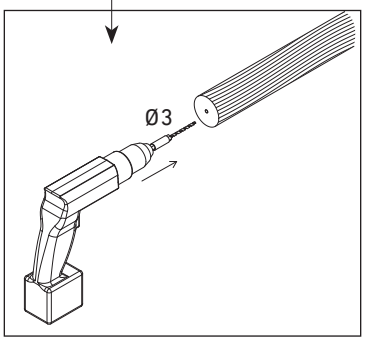
Wall or extension bracket for handrail in wood or aluminium