DOLLE®

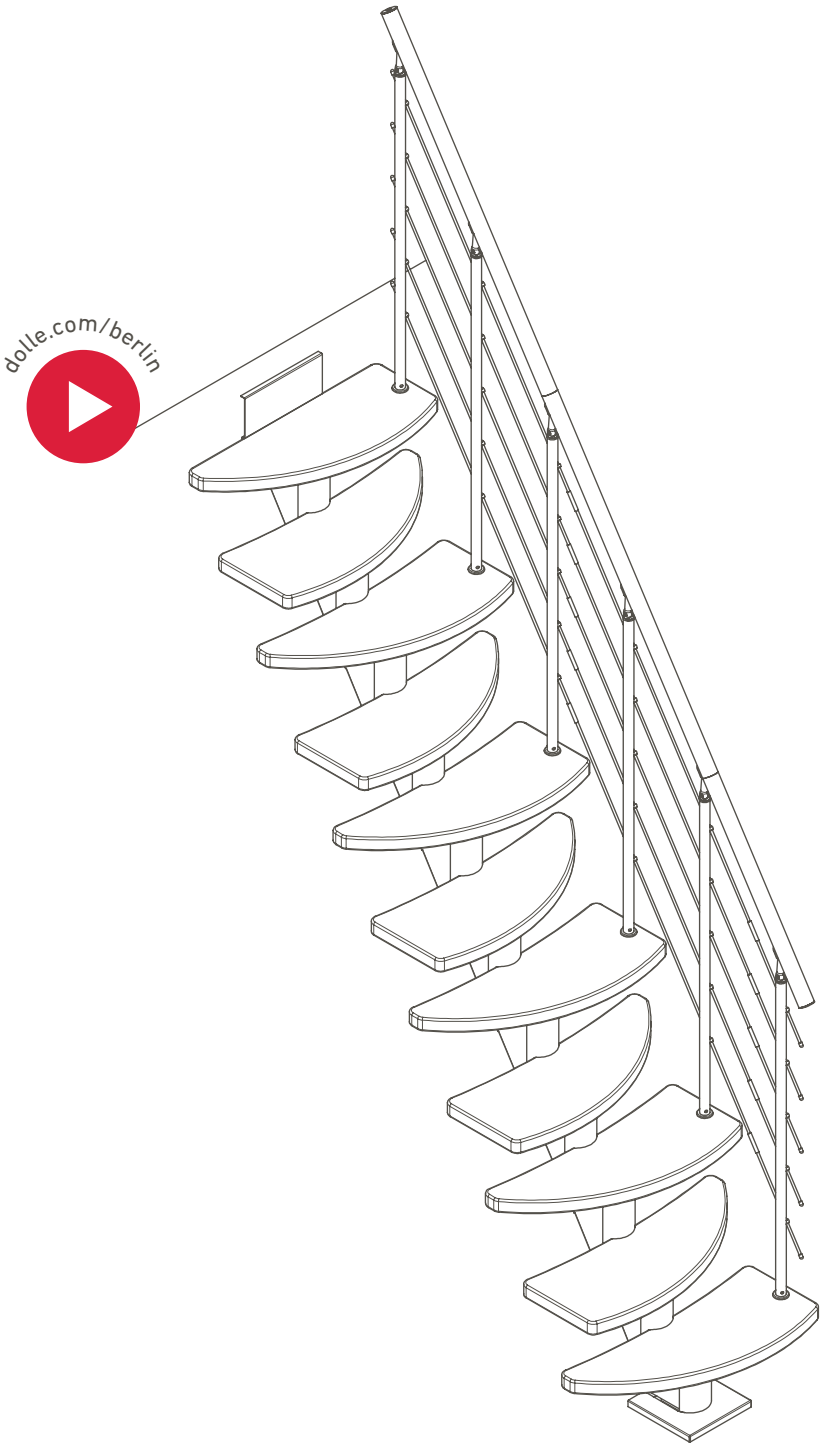

SHAPE 6 BANISTER

BERLIN

INSTRUCTION / MONTAGEANLEITUNG
INSTRUKTION / INSTRUCCIÒN / INSTRUKCJA

SOGEM®
PART OF DOLLE GROUP

© DOLLE A/S | In the interest of technical progress we reserve the right to make changes | R1-96830 | 13/01/23

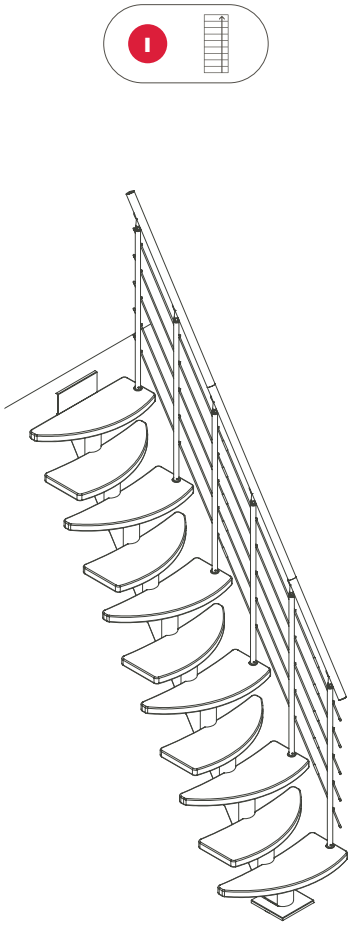

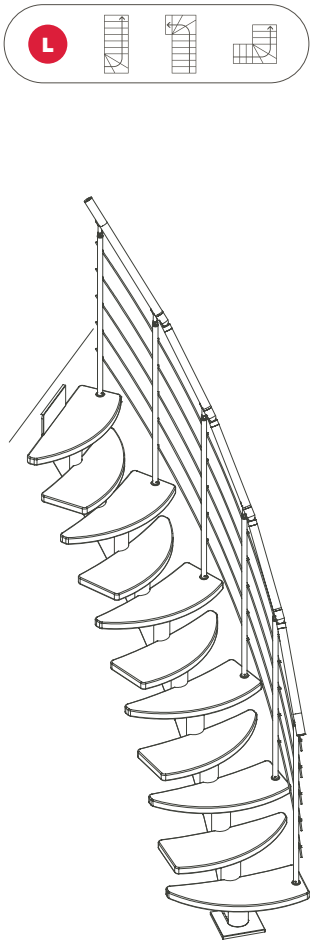

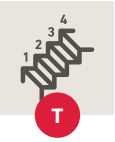

	Height floor-to-floor	Rise height	Number of treads
	Geschosshöhe	Steigungshöhe	Anzahl Stufen
	Hauteur sol-sol	Hauteur de marche	Nombre de marches
	Altura de suelo/suelo	Altura de peldaños	Numero de peldaños
	Altura do chão / chão	Altura do degrau	Número de etapas (degraus)
	Hoogte vloer/vloer	Hoogte trede	Aantal treden
	Etagehøjde	Stigningshøjde	Antal trin
	Golv till golv höjd	Stigningshöjd	Antal steg
	Wysokość kondygnacji od podłogi do podłogi	Wysokość stopnia	Ilość stopni
	Înălțime sol-sol	Înălțime treaptă	Număr trepte
	Výška patra podlaha-podlaha	Výška schodu	Počet nášlapů
	Высота от пола до пола	Шаг ступени	Кол-во ступеней
	Aukšto aukštis	Pakopos aukštis	Pakopų kiekis
	Stāva augstums	Pakāpiena augstums	Pakāpienu skaits
	Korruse kõrgus	Astme kõrgus	Astmete arv
	Višina nadstropja	Višina stopnice	Število stopnic
	Visina kata	Visina stepenice	Broj stepenica
	Výška podlažia	Výška stupňa	Počet stupňov

1

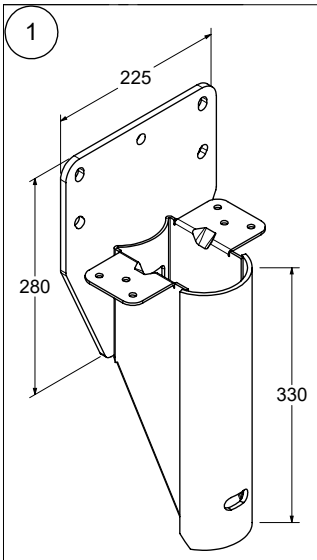

x 1

K2-1077400 *RAL 7016*
K2-1077401 *RAL 9005*
K2-1077402 *Pearl grey*
K2-1077403 *RAL 9016*

2

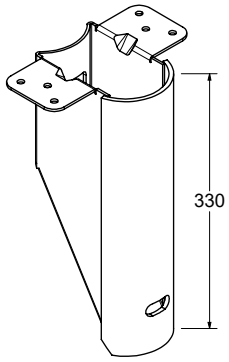

	10	11	12	13
x	8	9	10	11

K2-1077405 *RAL 7016*
K2-1077406 *RAL 9005*
K2-1077407 *Pearl grey*
K2-1077408 *RAL 9016*

3

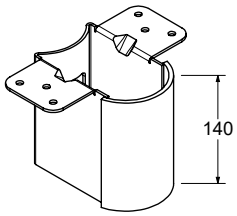

x 1

K2-1077410 *RAL 7016*
K2-1077411 *RAL 9005*
K2-1077412 *Pearl grey*
K2-1077413 *RAL 9016*

4

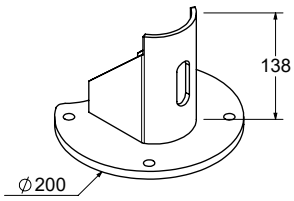

x 1

K2-1077442 *RAL 7016*
K2-1077411 *RAL 9005*
K2-1077412 *Pearl grey*
K2-1077413 *RAL 9016*

5

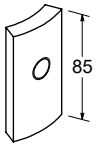

	10	11	12	13
x	9	10	11	12

H2-20505

6

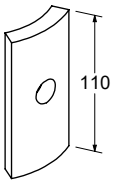

	10	11	12	13
x	9	10	11	12

H2-20506

7

	x
10	6
11	6
12	6
13	7

K2-1077185 *RAL 7016*
K2-1077186 *RAL 9005*
K2-1077187 *Pearl grey*
K2-1077188 *RAL 9016*

8

	10	11	12	13
x	6	6	6	7

K1-1077203

10

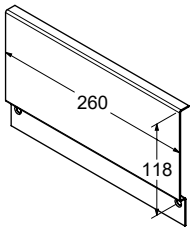

x 1

K1-1077070 *RAL 7016*
K1-1077071 *RAL 9005*
K1-1077072 *Pearl grey*
K1-1077073 *RAL 9016*

11

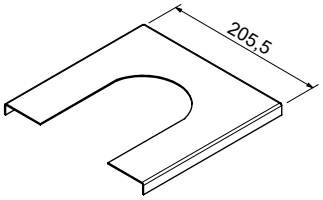

x 1

K1-1077175 *RAL 7016*
K1-1077176 *RAL 9005*
K1-1077177 *Pearl grey*
K1-1077178 *RAL 9016*

20

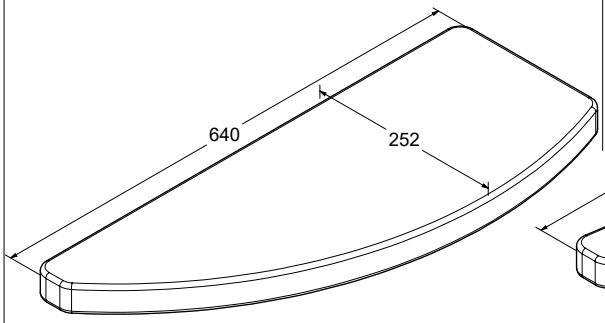

x 1

M2-1078260 Beech / Buche / Beuk / Hêtre / Bøg
M2-1078270 Oak / Eiche / Eik / Chêne / Eg
M2-1078280 Oak white / Eiche weiß / Eik wit / Chêne blanc / Eg hvid

21

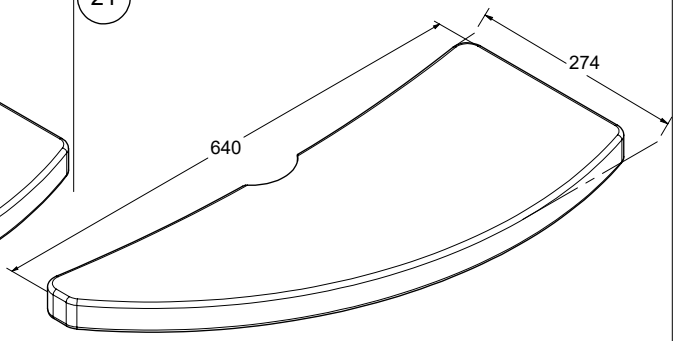

	10	11	12	13
x	9	10	11	12

M2-1078261 Beech / Buche / Beuk / Hêtre / Bøg
M2-1078271 Oak / Eiche / Eik / Chêne / Eg
M2-1078281 Oak white / Eiche weiß / Eik wit / Chêne blanc / Eg hvid

26

	10	11	12	13
x	6	6	6	7

K2-1077195 *RAL 7016*
K2-1077196 *RAL 9005*
K2-1077197 *Pearl grey*
K2-1077198 *RAL 9016*

27

x 2

K1-1077150 *RAL 7016*
K1-1077151 *RAL 9005*
K1-1077152 *Pearl grey*
K1-1077153 *RAL 9016*

28

x 5

K2-1077180 *RAL 7016*
K2-1077181 *RAL 9005*
K2-1077182 *Pearl grey*
K2-1077183 *RAL 9016*

29

	10	11	12	13
x	30	30	30	35

K1-1077202

30

x 10

K1-04050

31

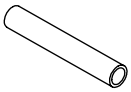

x 10

K1-14939

32

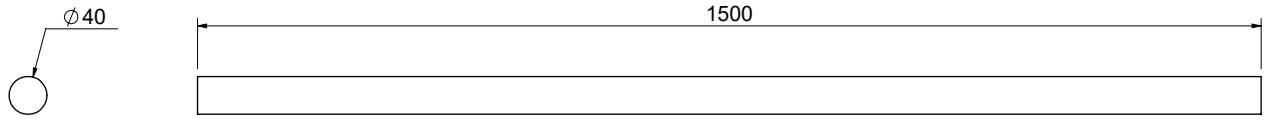

x 3 1078905 *Beech / Buche / Beuk / Hêtre / Bøg*
1078915 *Oak / Eiche / Eik / Chène / Eg*

33

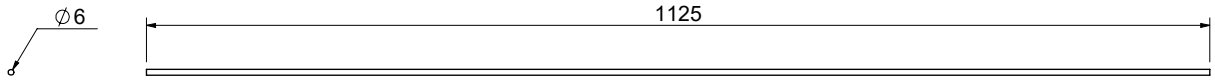

x 15
K1-14076

37

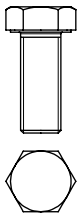

	10	11	12	13
x	10	11	12	13

R1-63500
M16 x 40

38

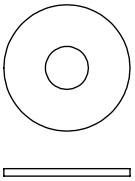

	10	11	12	13
x	10	11	12	13

K3-04053
Ø50 / Ø17

39

x 1
R2-86074
M16

40

x 9
K3-08001
Ø12 x 60

41

x 9
K3-04001
Ø10

42

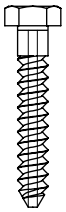

x 9
K3-06003
Ø10 x 60

44

	10	11	12	13
x	60	66	72	78

R1-63267
Ø6 x 35 TX30

45

	10	11	12	13
x	6	6	6	7

K3-05002
M6 x 8

46

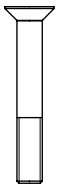

	10	11	12	13
x	6	6	6	7

K3-02097
M10 x 70

47

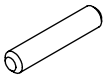

x 10
R3-91415
Ø8 x 40

48

	10	11	12	13
x	6	6	6	7

K3-06008
Ø5 x 25

49

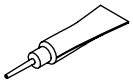

x 1
K3-90001

50

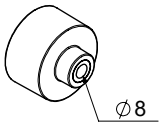

x 1
K1-01810

51

x 2
K3-06022
Ø5 x 35 TX25

52

	10	11	12	13
x	30	30	30	35

K3-05064
M4 x 4

56

x 2
K3-08006
Ø6 x 40

58

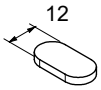

x 8
R3-20590

59

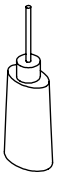

Wood glue
Holzkleber
Colle à bois
Trælim

x 1
K3-90005

60

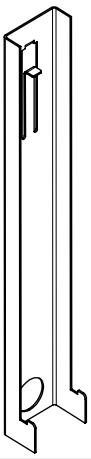

x 1
H2-63530

61

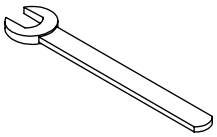

x 1
R1-63501
24 mm

62

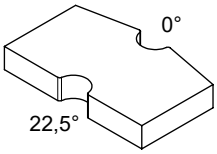

x 1
H3-35920

63

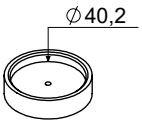

x 1
K1-01620

Tools not included!
Werkzeuge nicht enthalten!
Gereedschap niet inbegrepen!
Outils non inclus!
Værktøj ikke inkluderet!

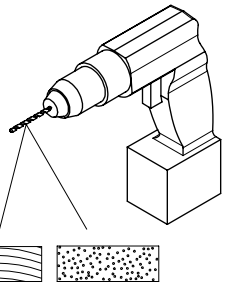

∅ 3mm
∅ 4mm
∅ 6mm
∅ 8mm
∅ 10mm

∅ 6mm
∅ 12mm

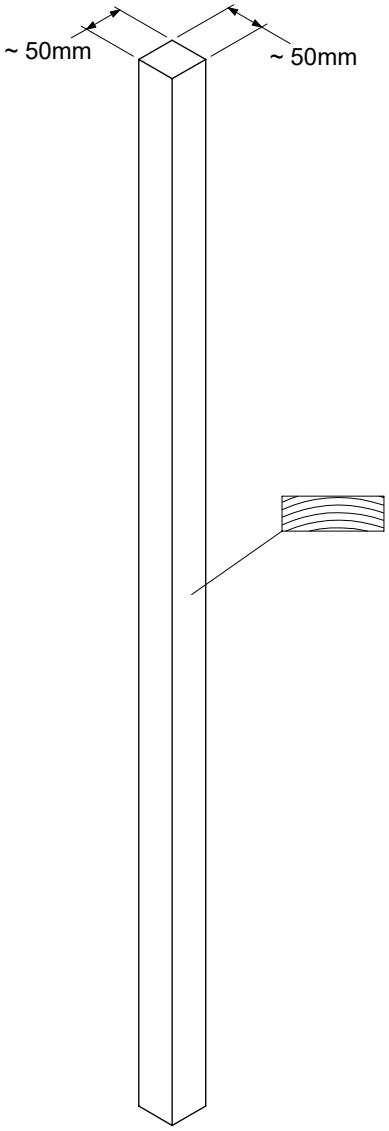

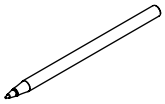

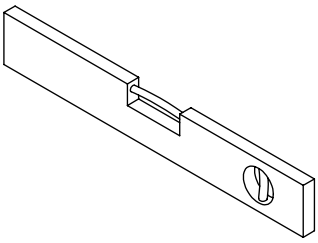

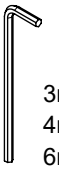

3mm
4mm
6mm

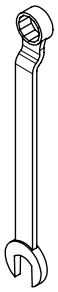

16mm

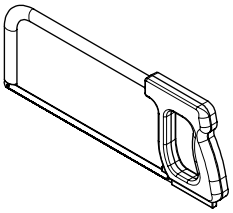

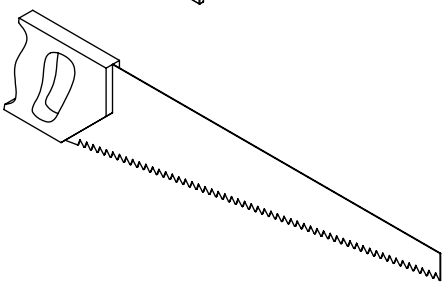

TX25
TX30
PZ2

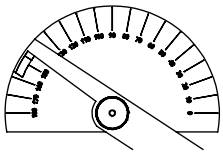

Protractor
Winkelmesser
Gradenboog
Rapporteur d'angle
Vinkelmåler

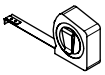

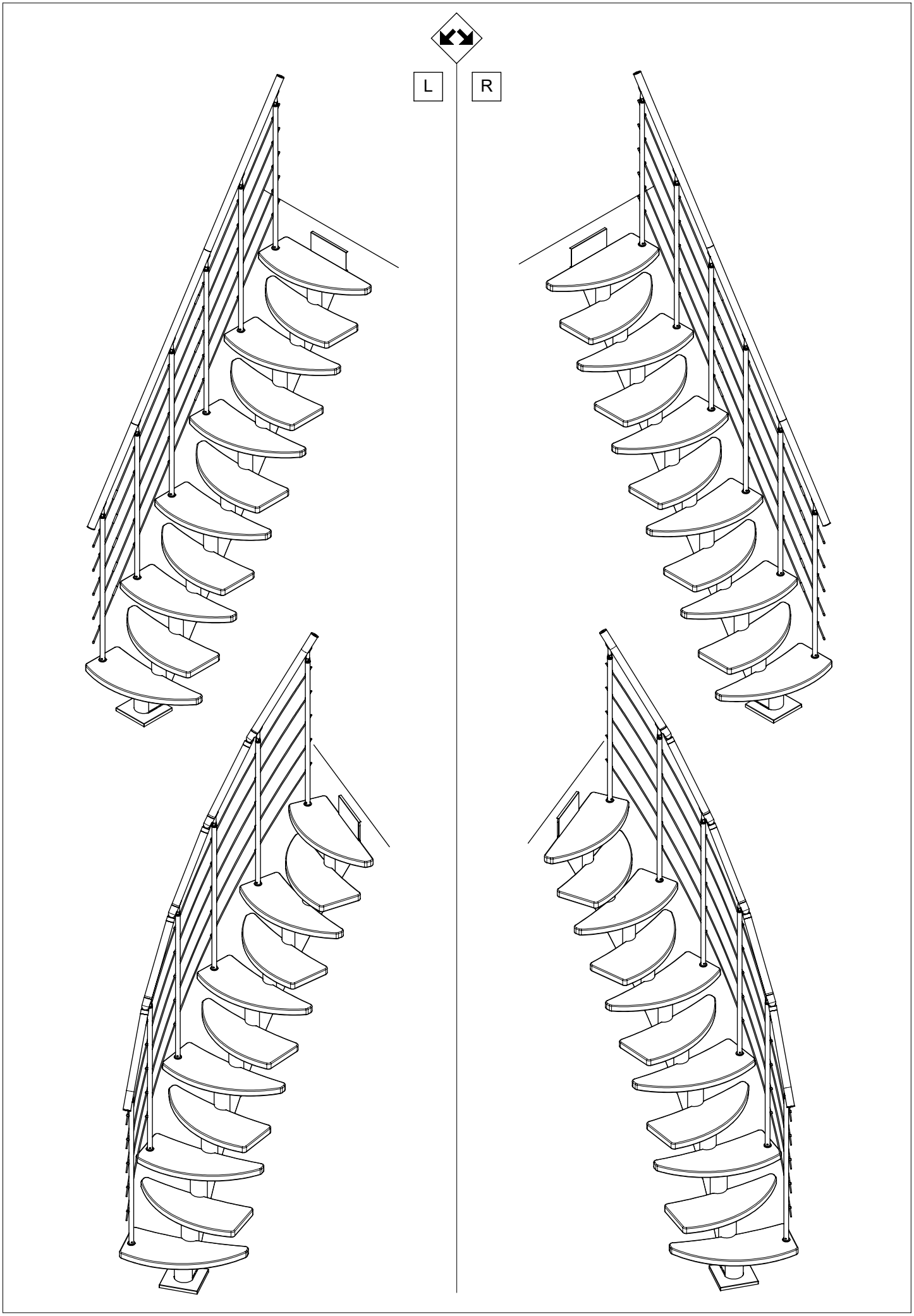
L
R

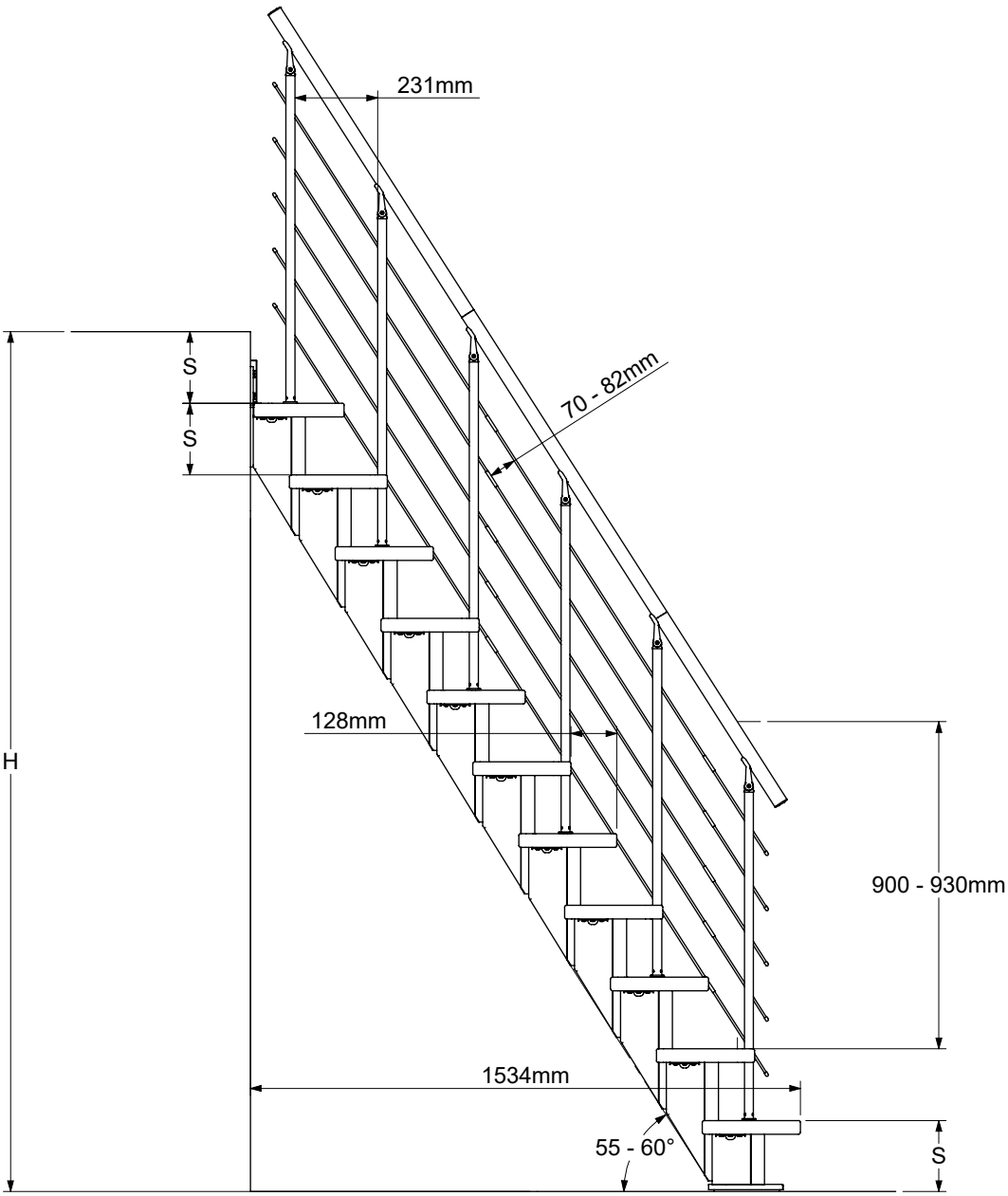

$$S = \frac{H}{T + 1}$$

min S	max S
185 mm	225 mm

Example / Beispiel / Voorbeeld / Example / Eksempel:
H: 2400 mm, T: 11 st(pcs)

$$S = \frac{2400\ \text{mm}}{11 + 1} = 200\ \text{mm}$$

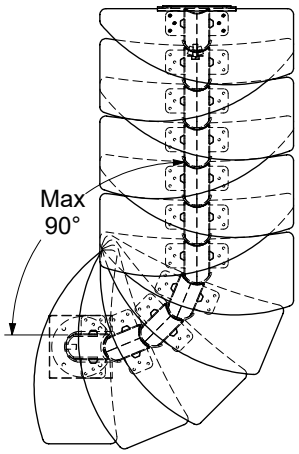

T	min H	max H
9	1850 mm	2250 mm
10	2035 mm	2475 mm
11	2220 mm	2700 mm
12	2405 mm	2925 mm
13	2590 mm	3150 mm

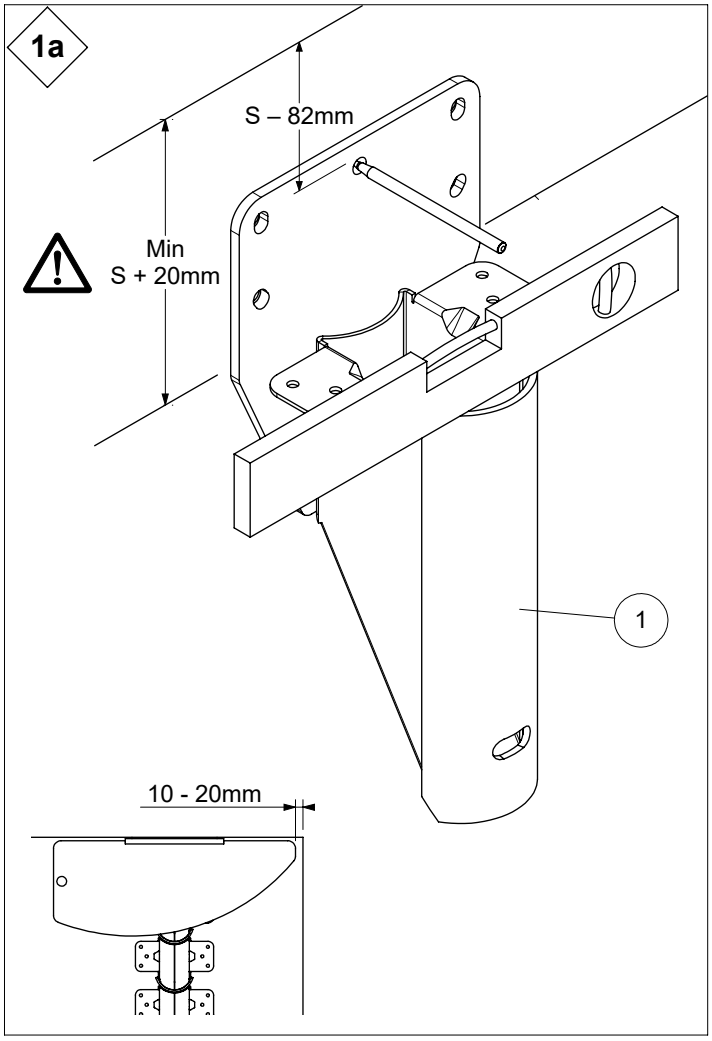
1a
S – 82mm
Min
S + 20mm
1
10 - 20mm

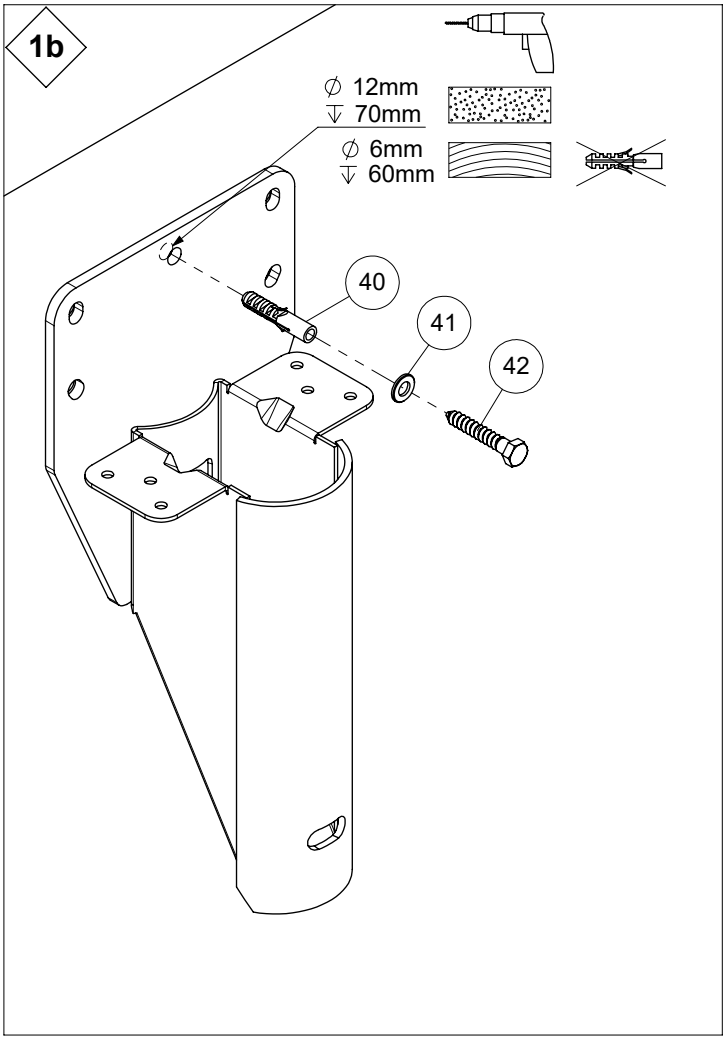
1b
∅ 12mm
↓ 70mm
∅ 6mm
↓ 60mm
40
41
42

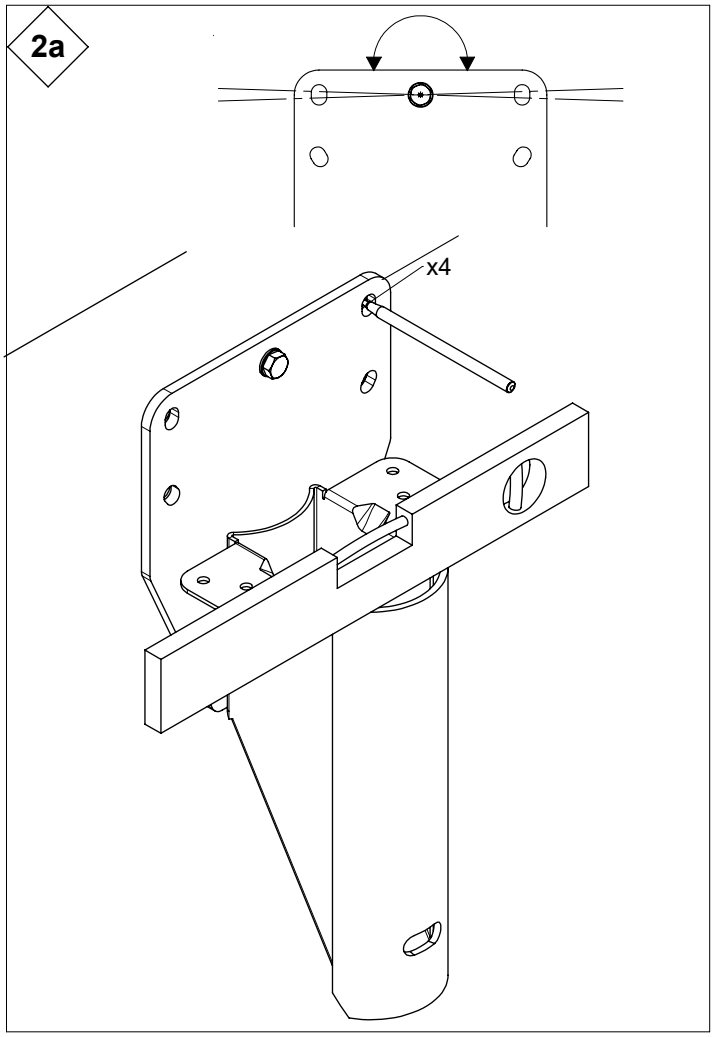
2a
x4

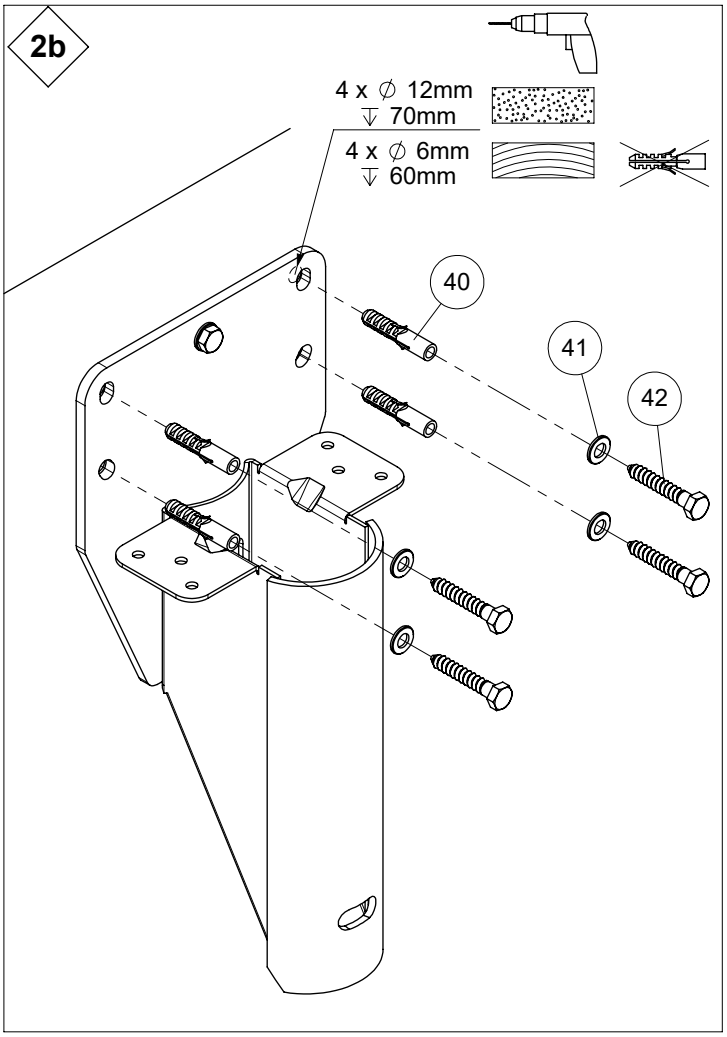
2b
4 x ∅ 12mm
↓ 70mm
4 x ∅ 6mm
↓ 60mm
40
41
42

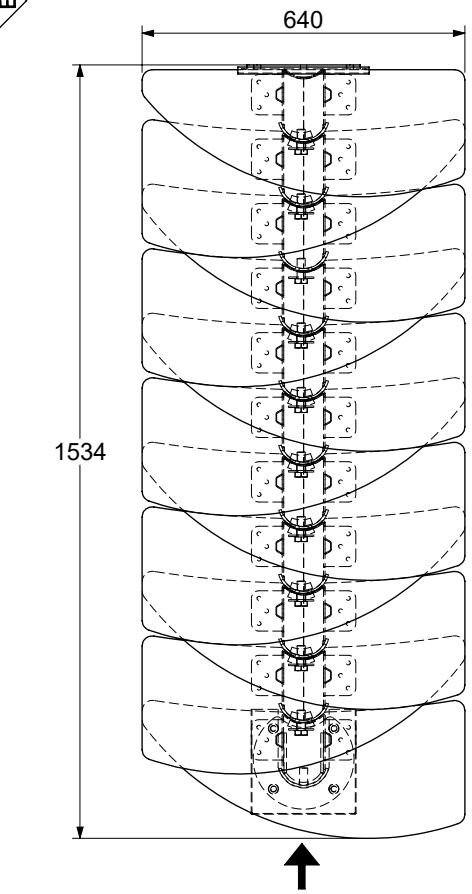
640
1534

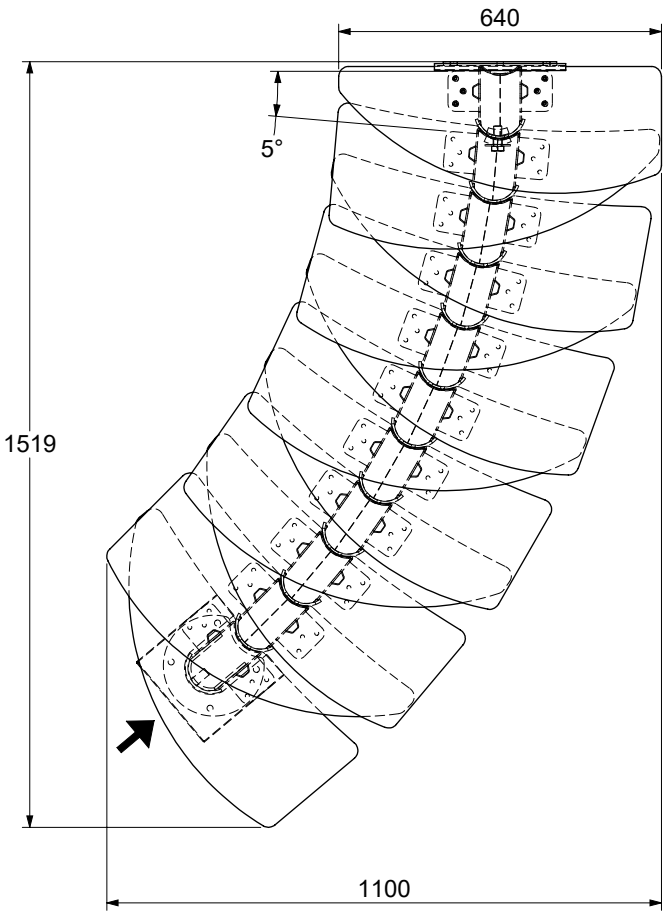
640
5°
1519
1100

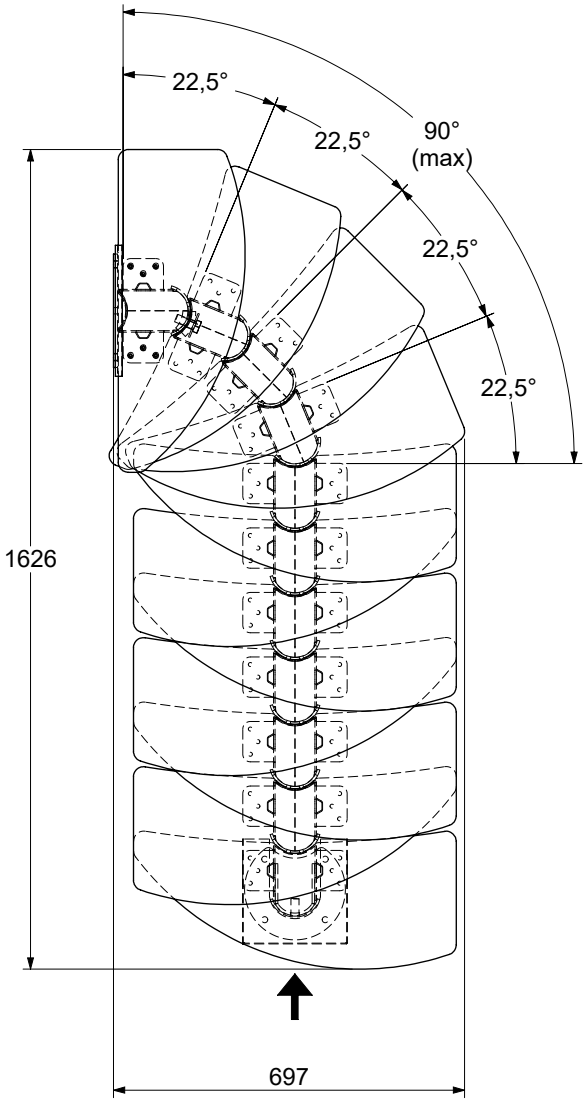
22,5°
22,5°
90°
(max)
22,5°
22,5°
1626
697

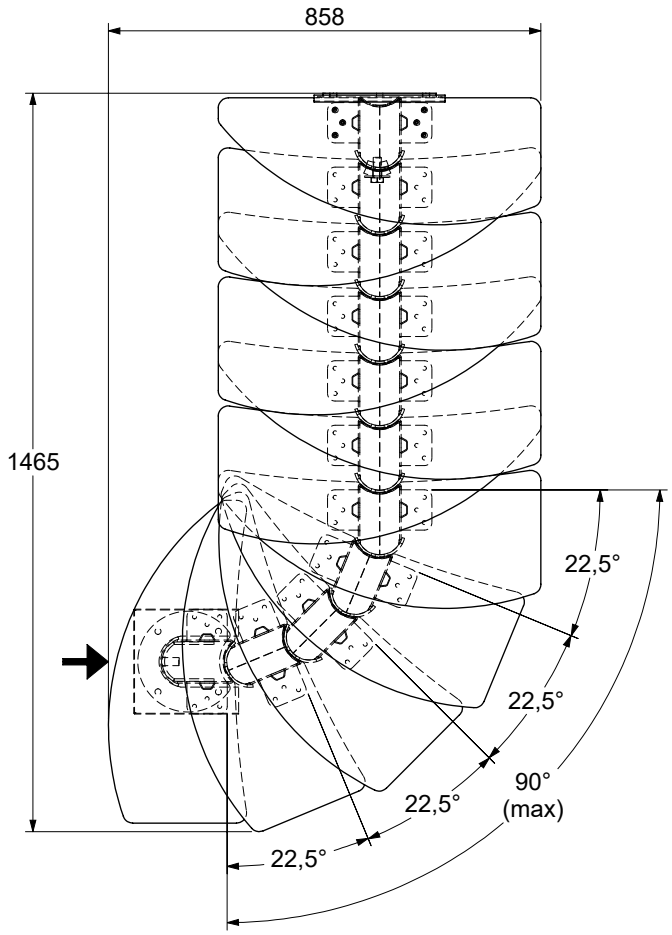
858
1465
22,5°
22,5°
22,5°
90°
(max)
22,5°

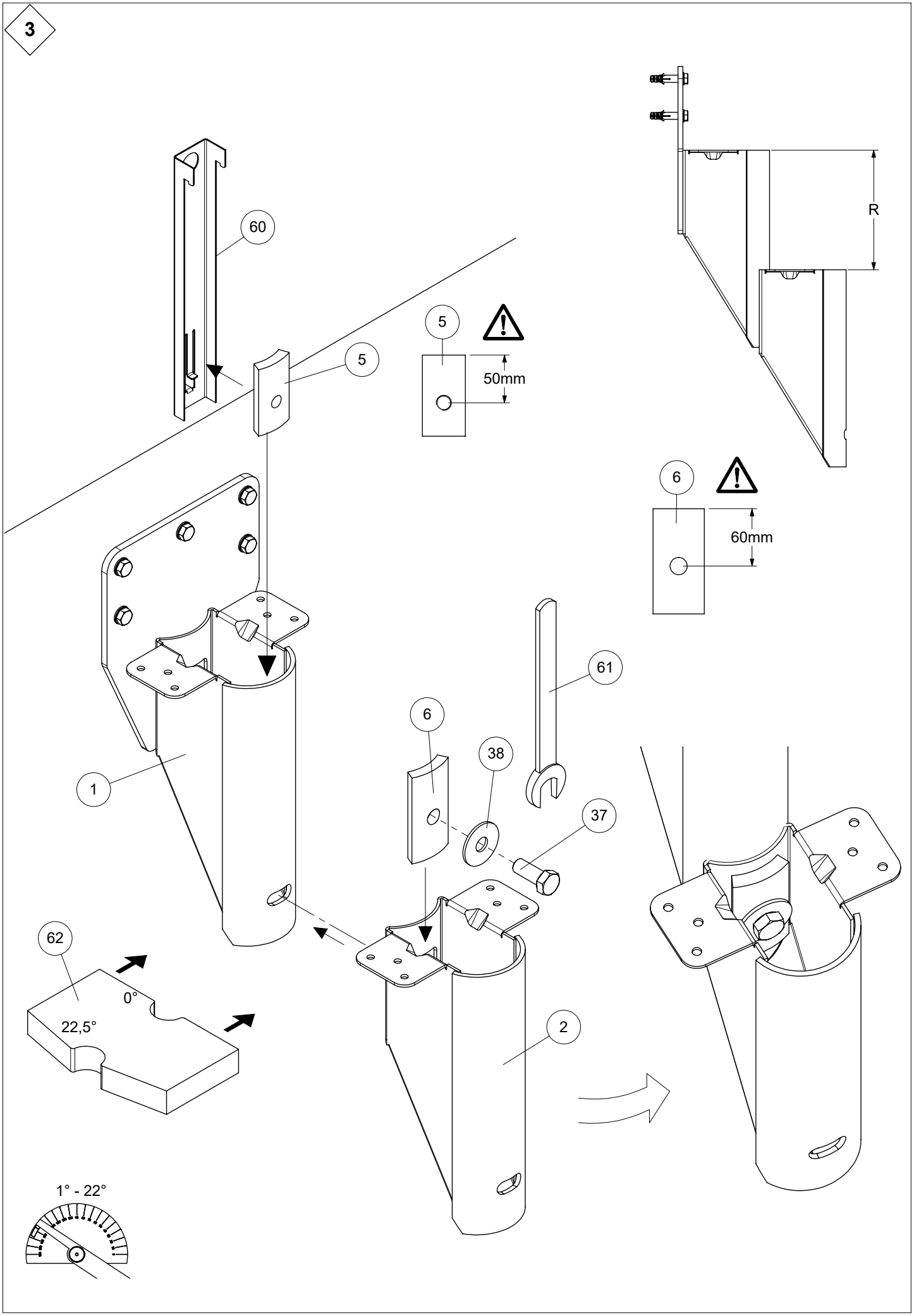
3
60
5
5
50mm
R
6
60mm
61
6
38
37
1
62
0°
22,5°
2
1° - 22°

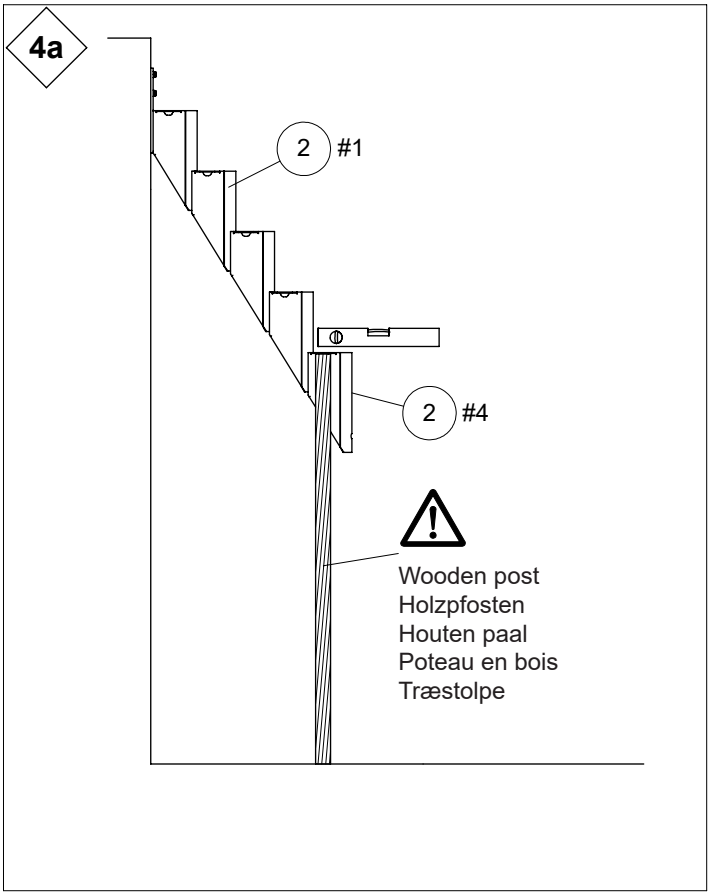
4a
2
#1
2
#4
Wooden post
Holzpfosten
Houten paal
Poteau en bois
Træstolpe

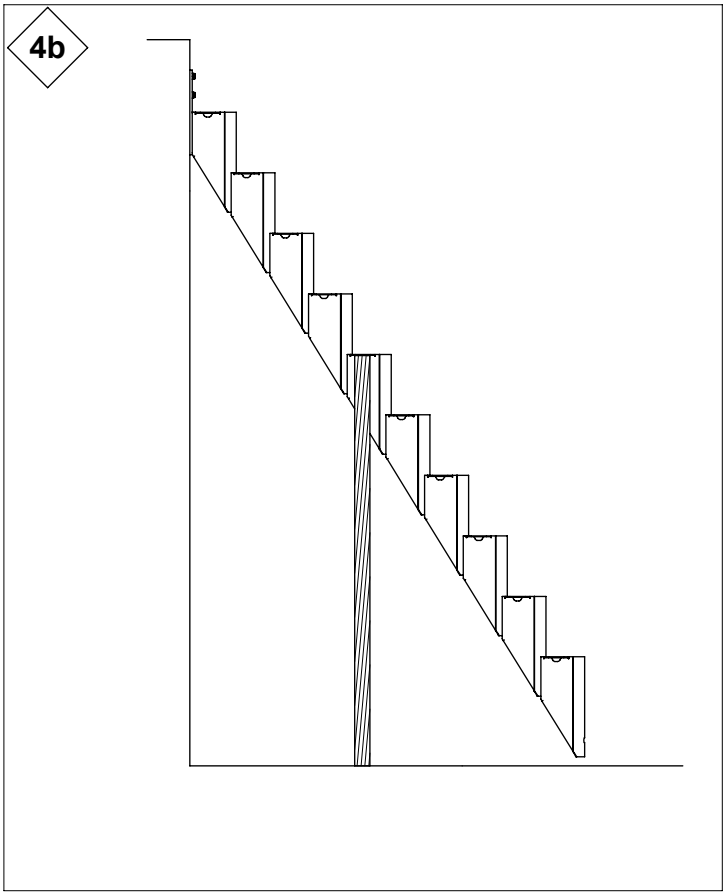
4b

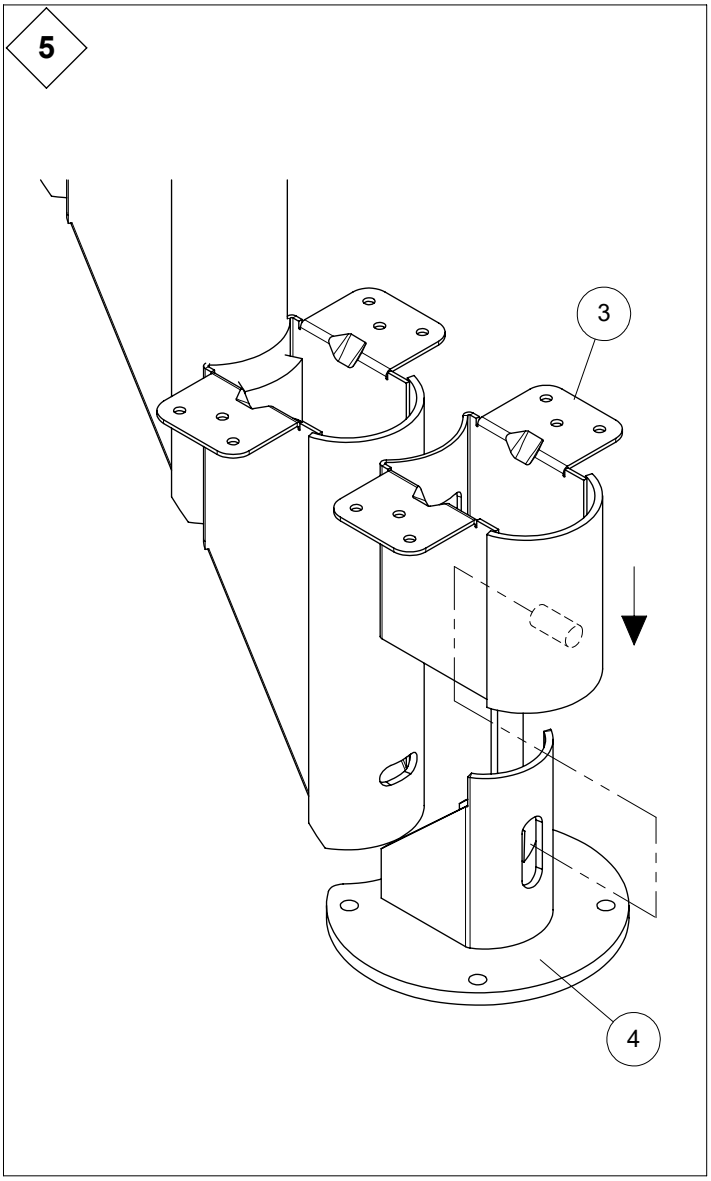
5
3
4

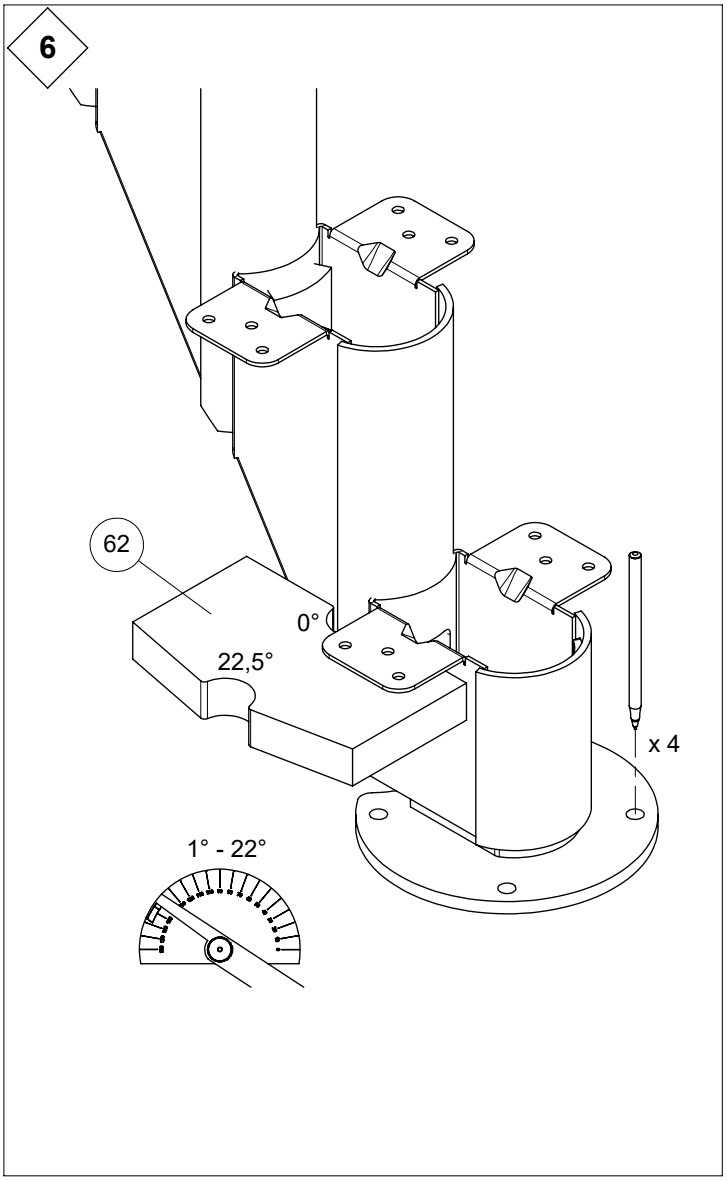
6
62
0°
22,5°
x 4
1° - 22°

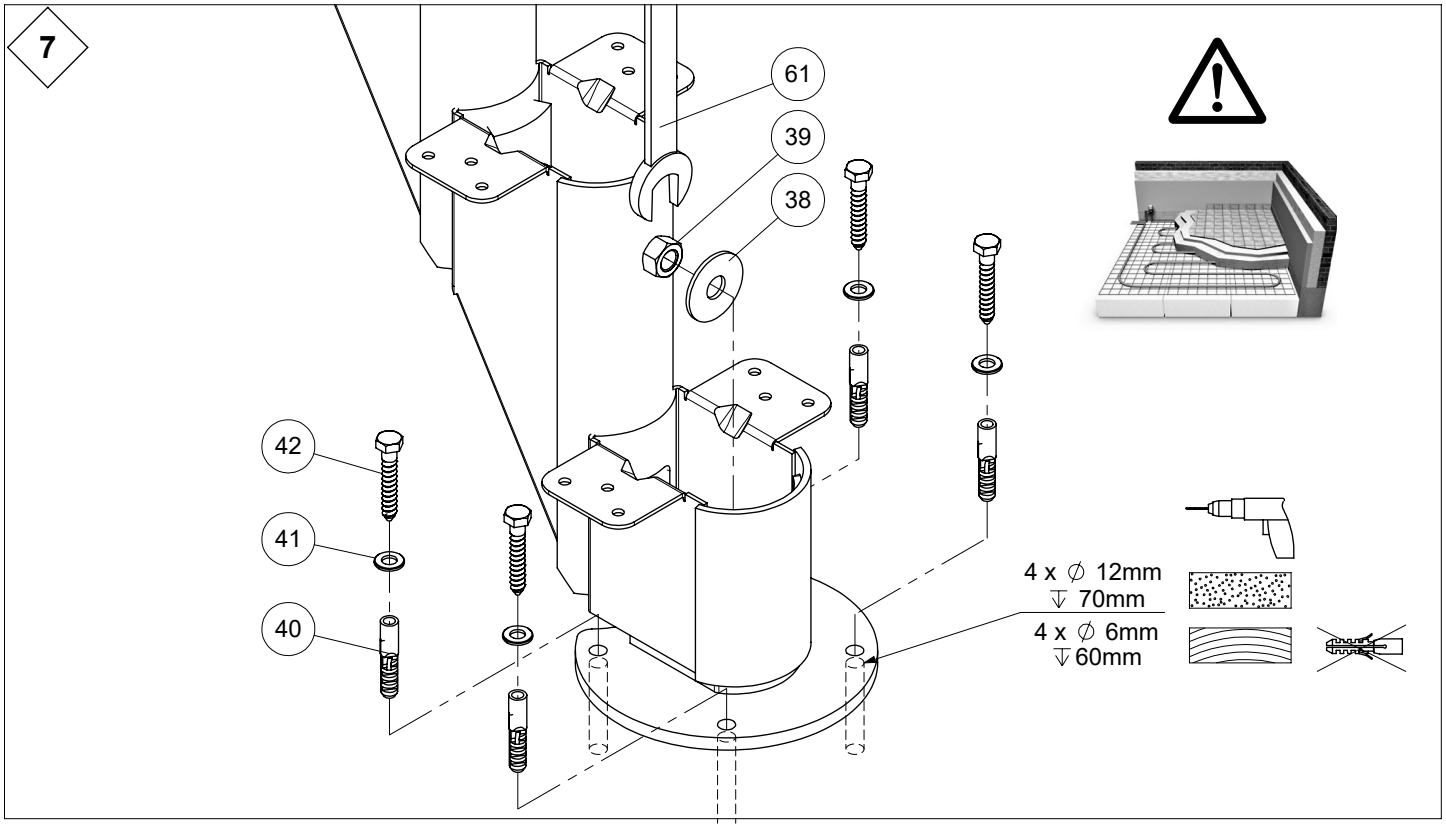
7
61
39
38
42
41
40
4 x ∅ 12mm
⇓ 70mm
4 x ∅ 6mm
⇓ 60mm

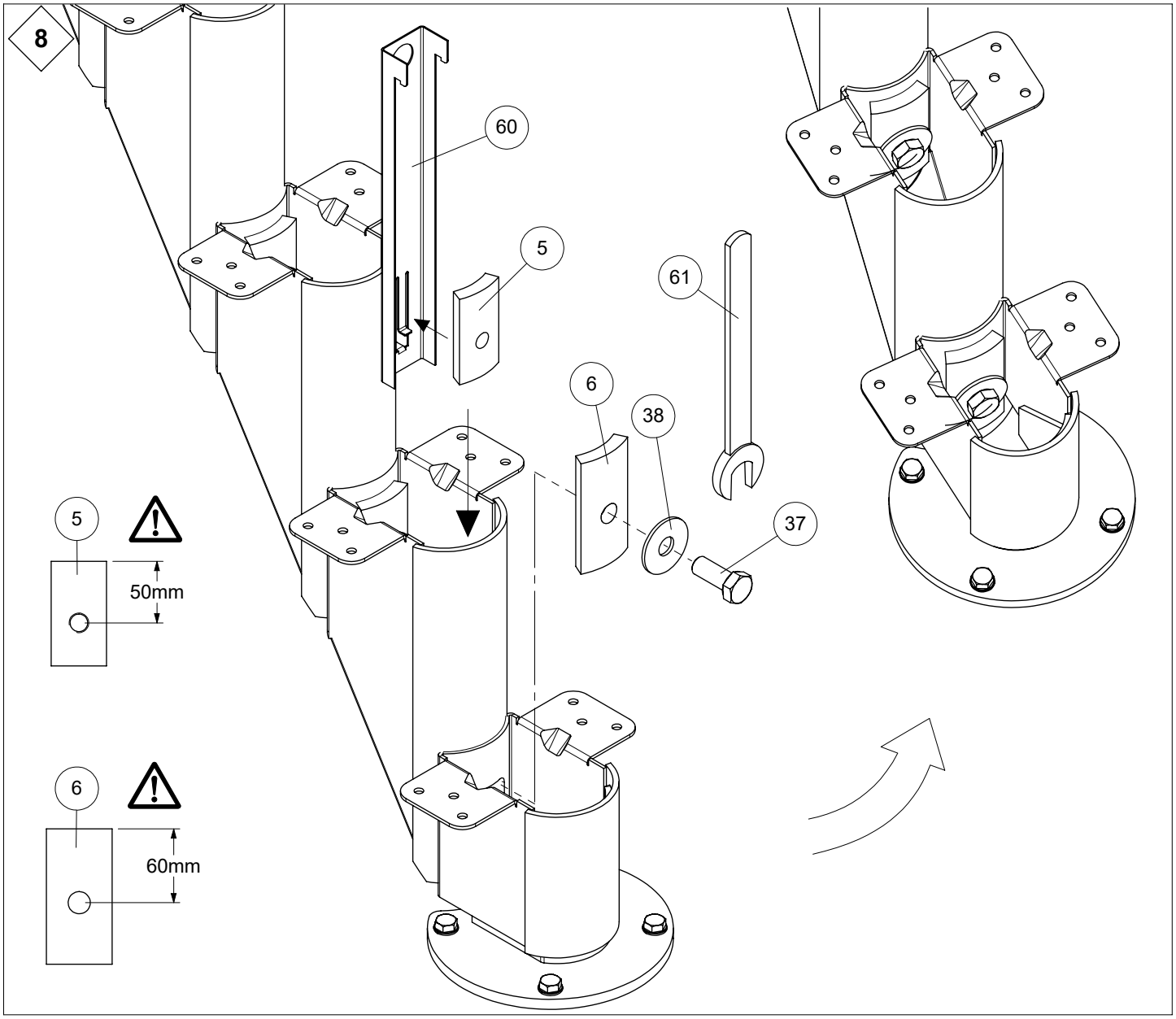
8
60
5
61
6
38
37
5
50mm
6
60mm

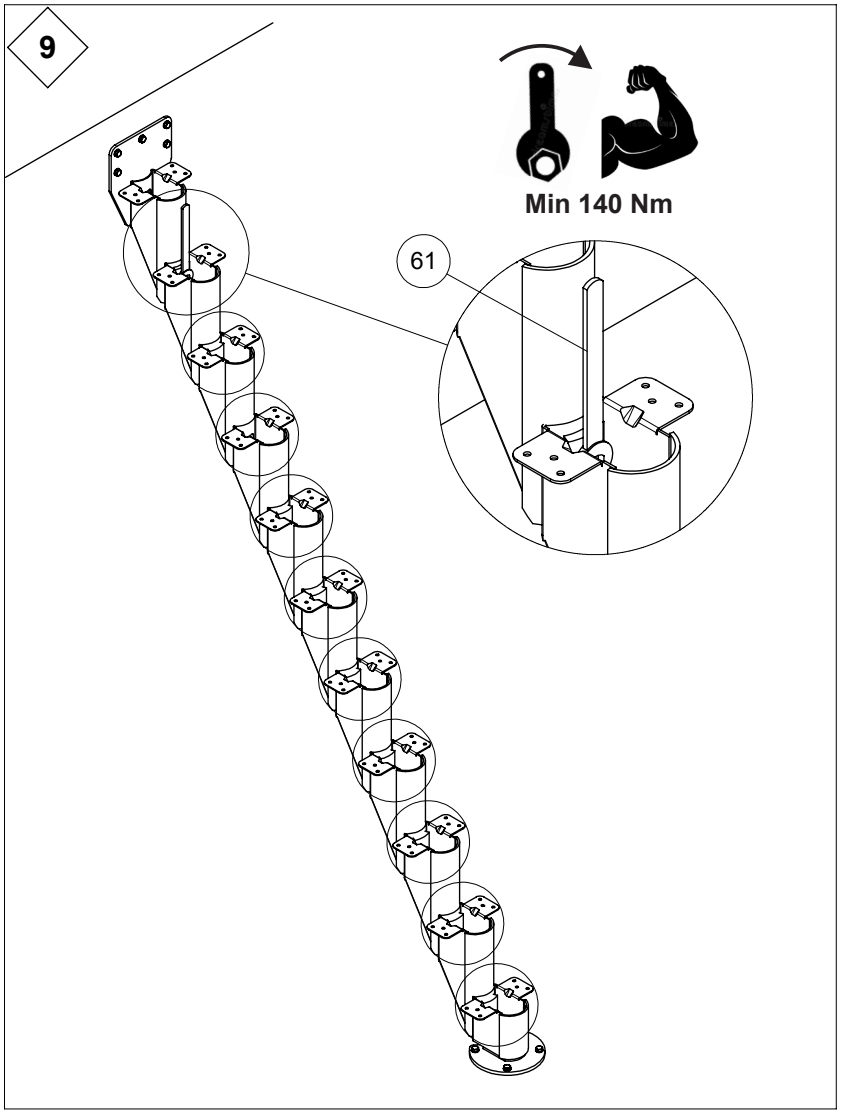
9
Min 140 Nm
61

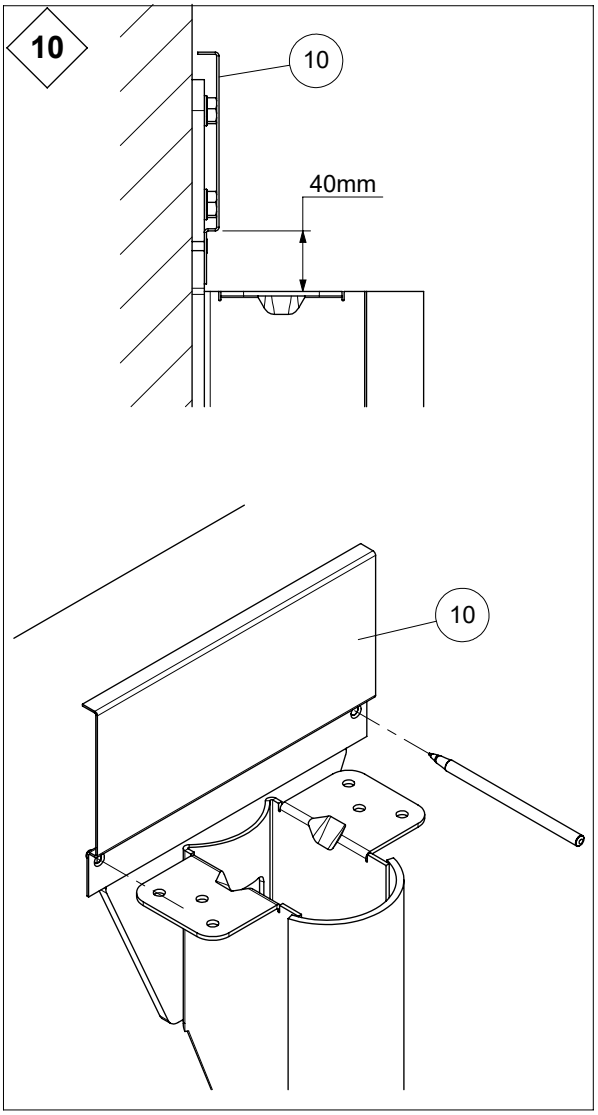
10
10
40mm
10

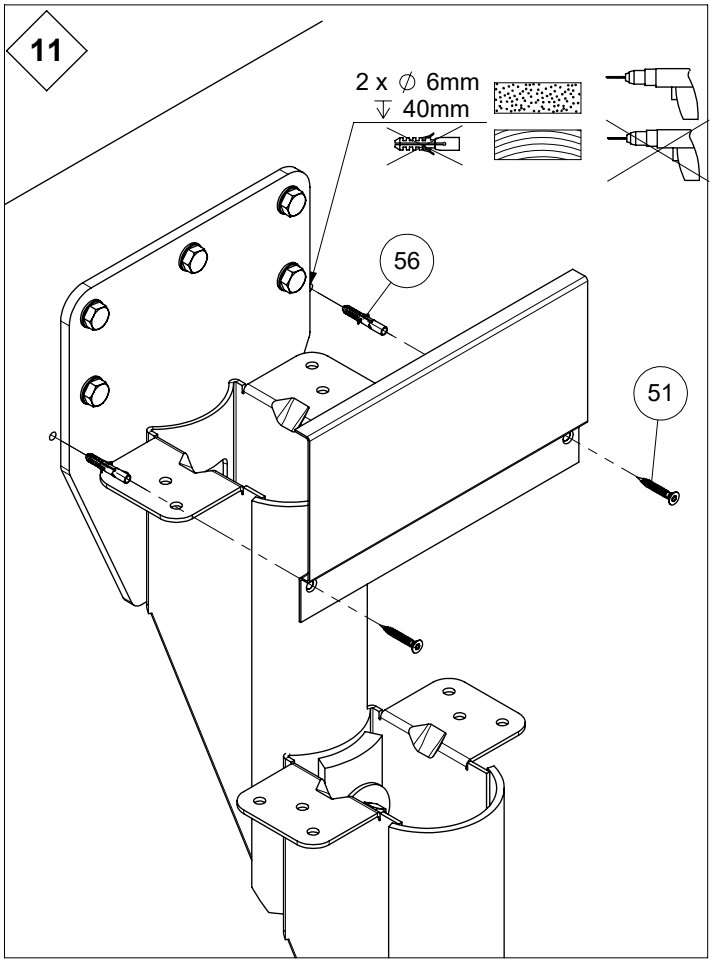
11
2 x ∅ 6mm
↓ 40mm
56
51

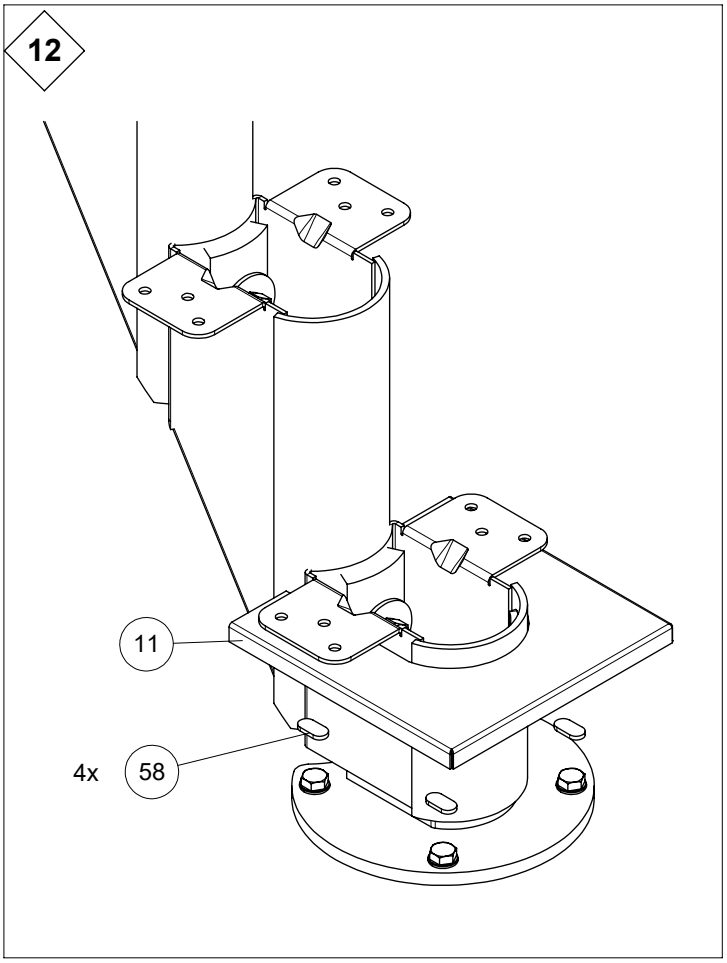
12
11
4x
58

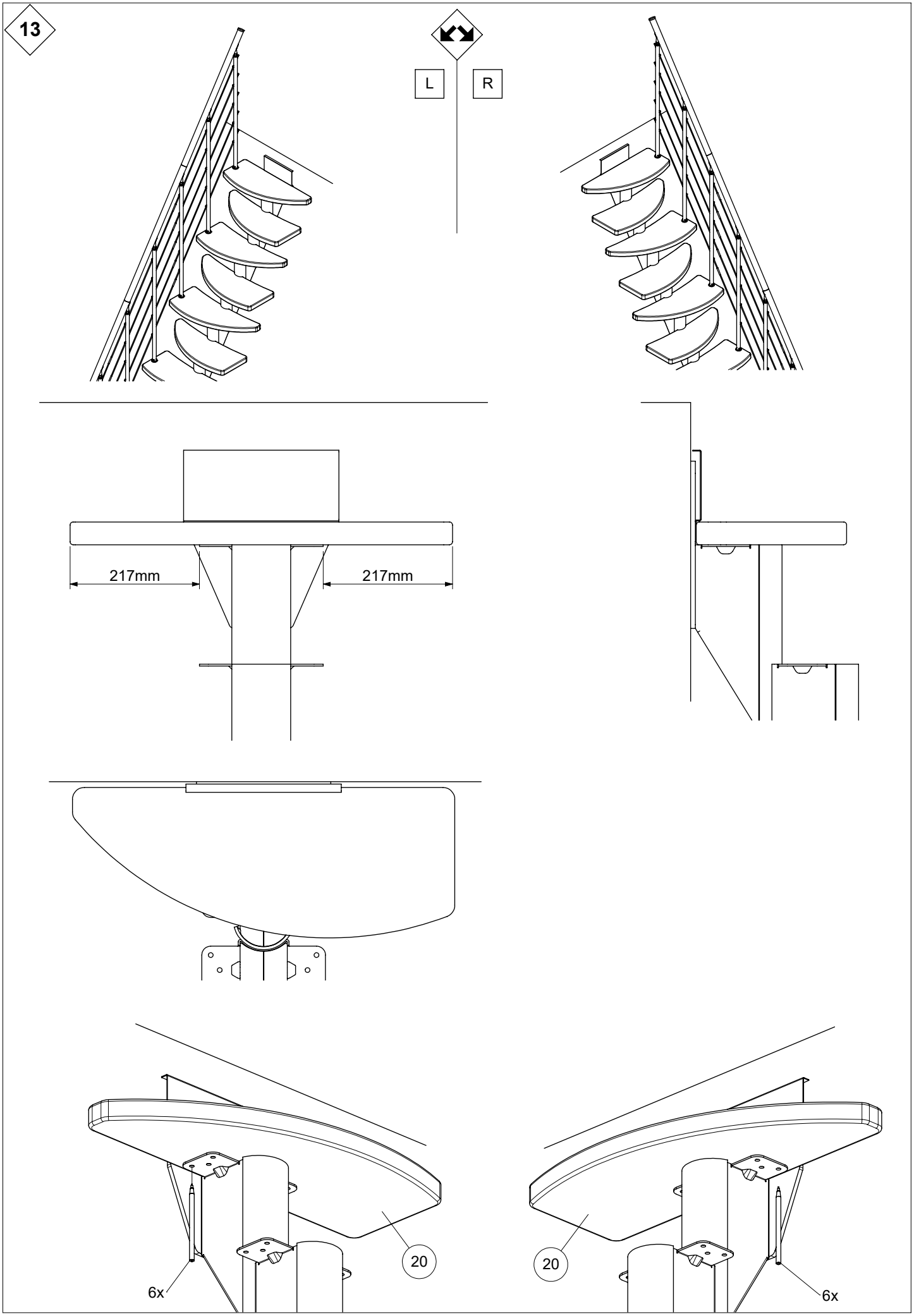
13
L
R
217mm
217mm
20
6x
20
6x

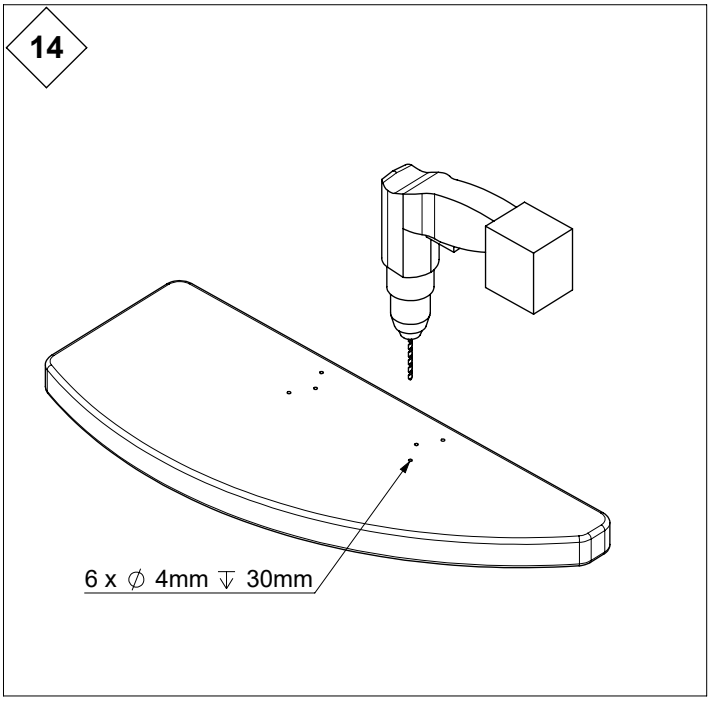
14
6 x ∅ 4mm ↧ 30mm

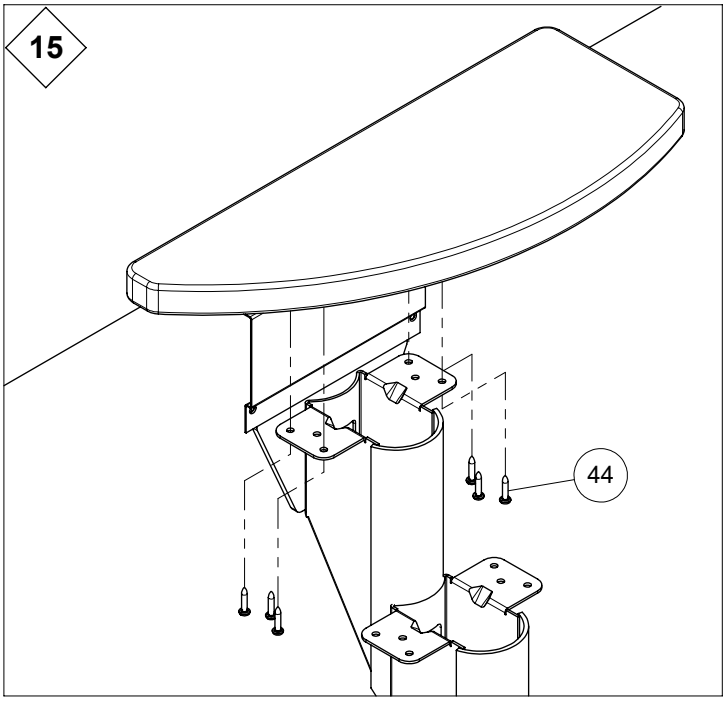
15
44

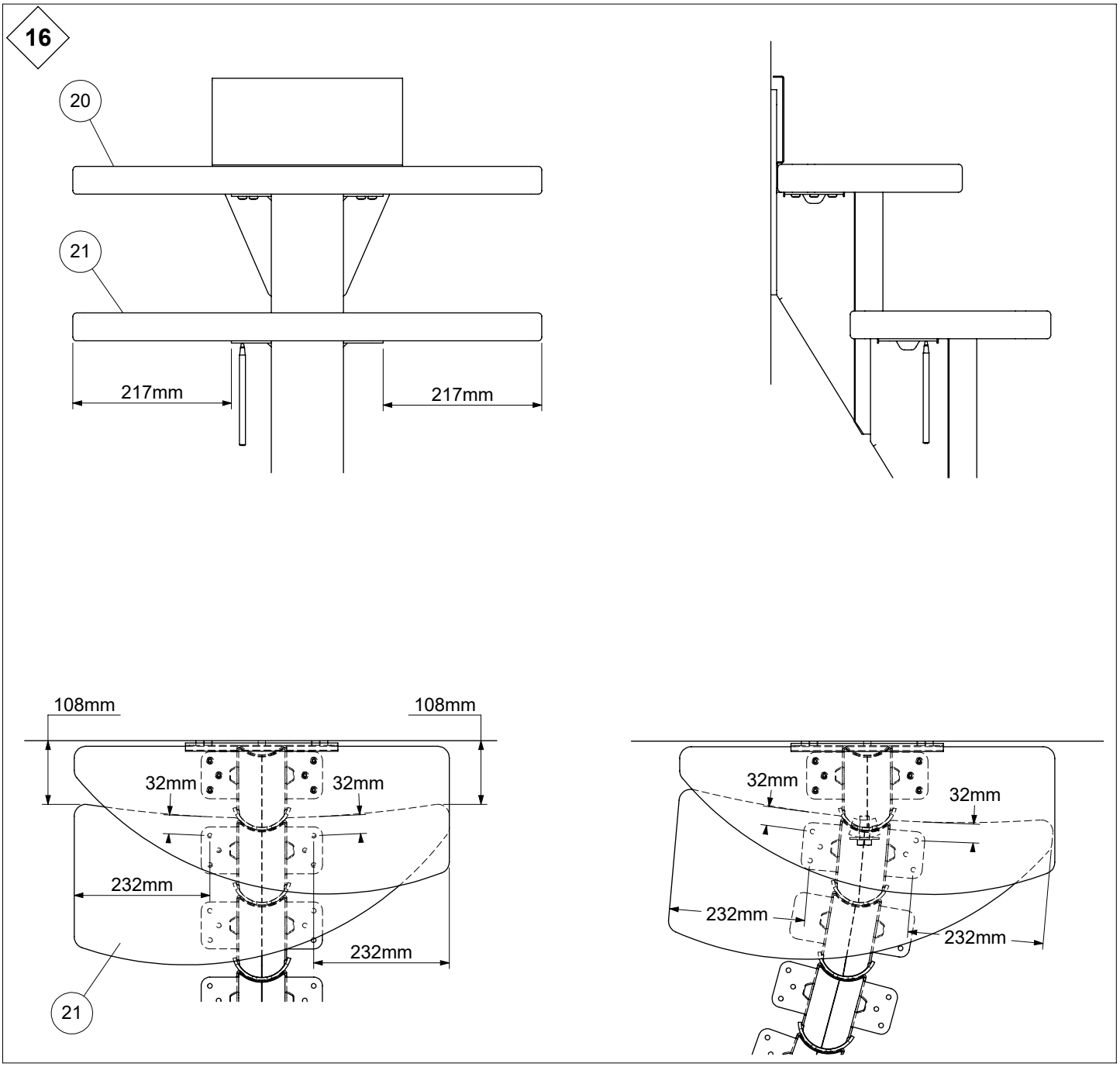
16
20
21
217mm
217mm
108mm
108mm
32mm
32mm
232mm
232mm
21
32mm
32mm
232mm
232mm

17

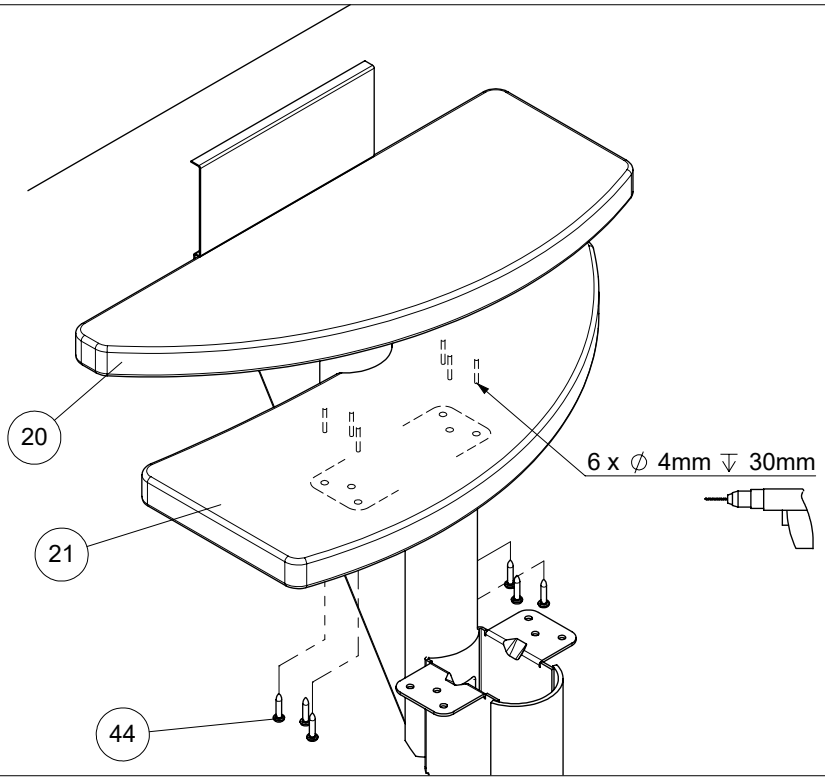

18

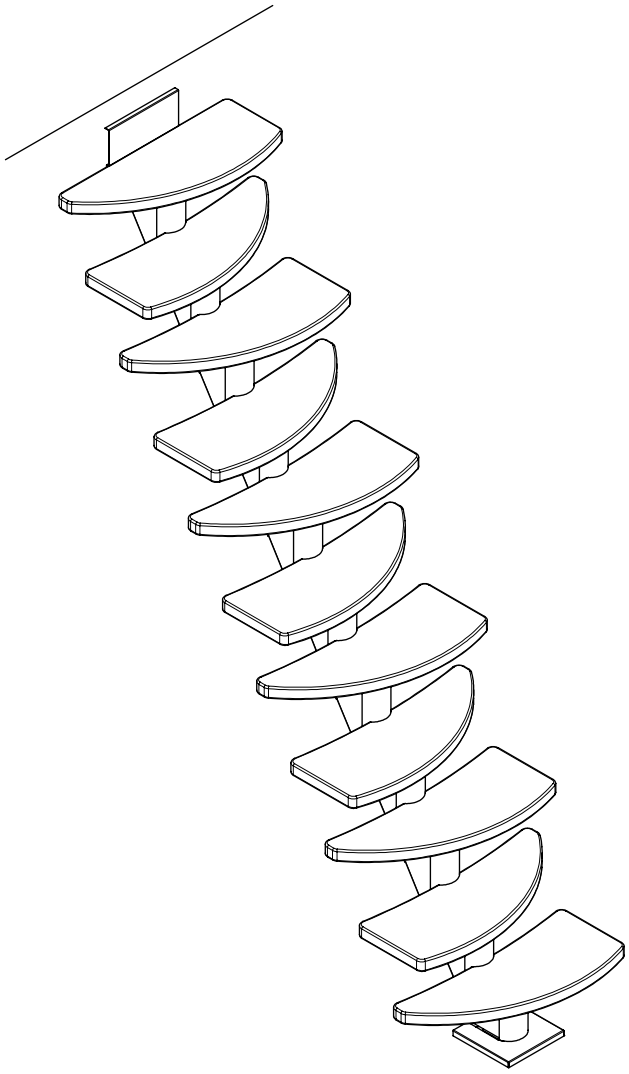

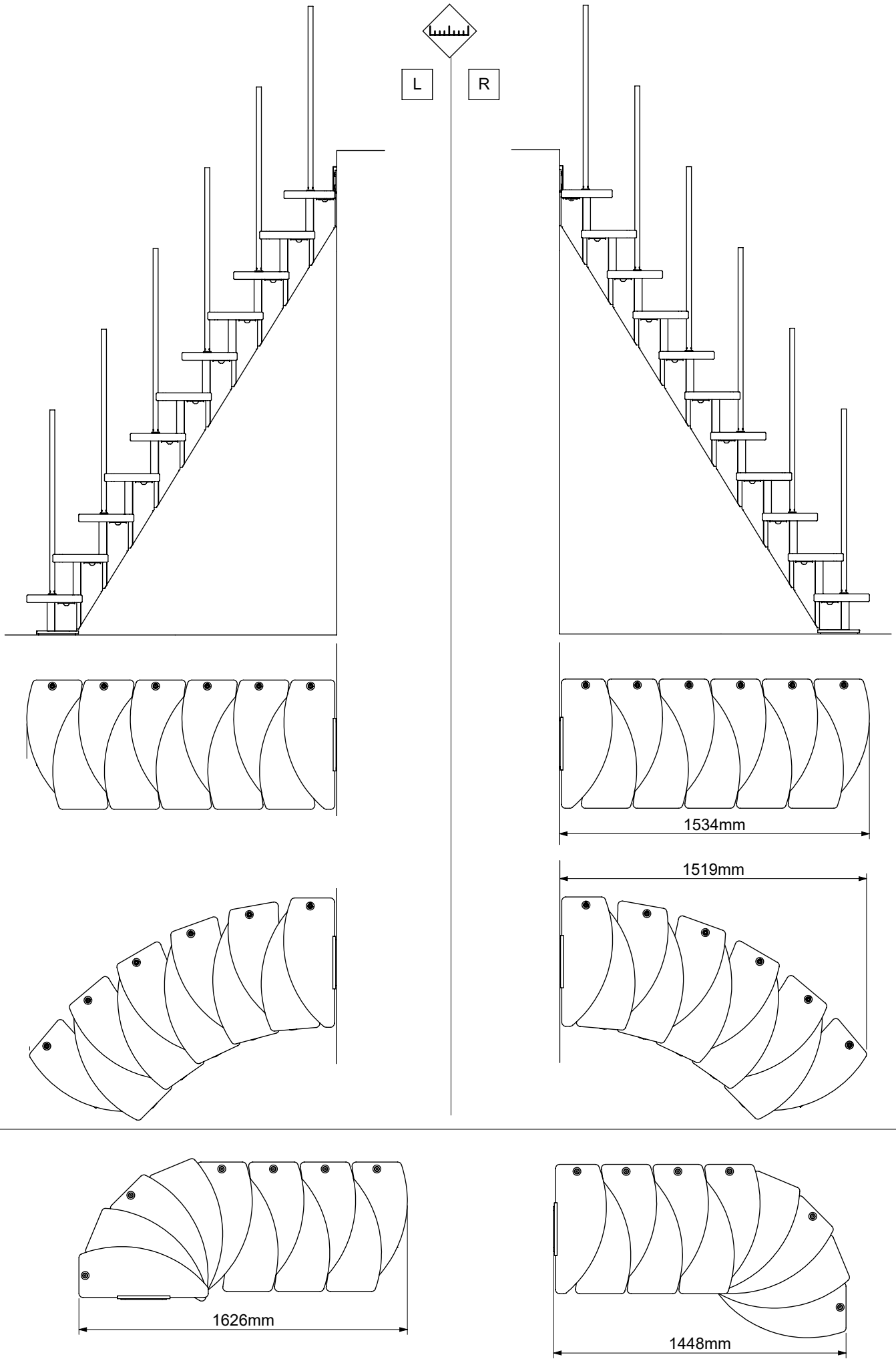
L
R
1534mm
1519mm
1626mm
1448mm

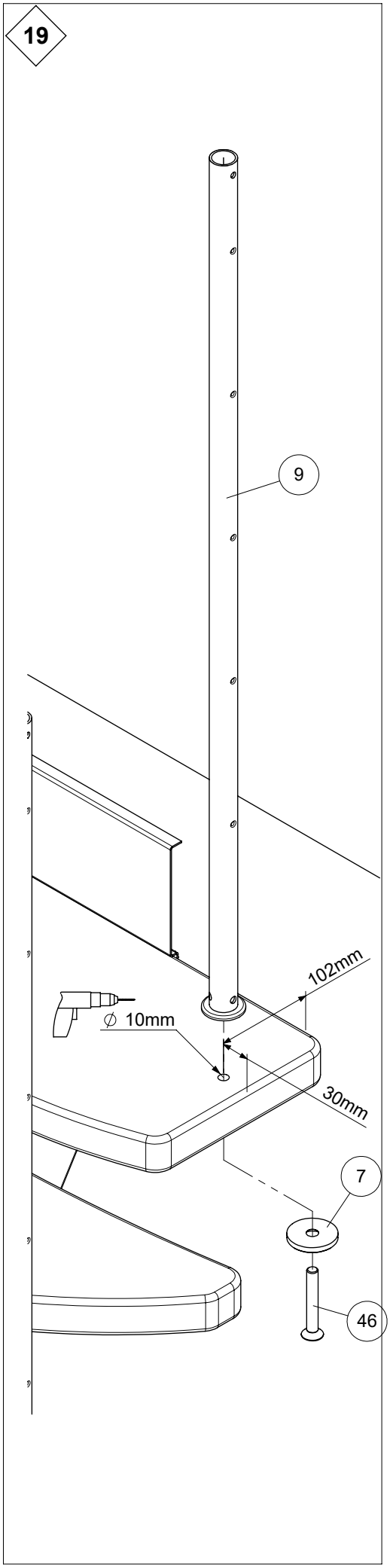
19
9
102mm
∅ 10mm
30mm
7
46

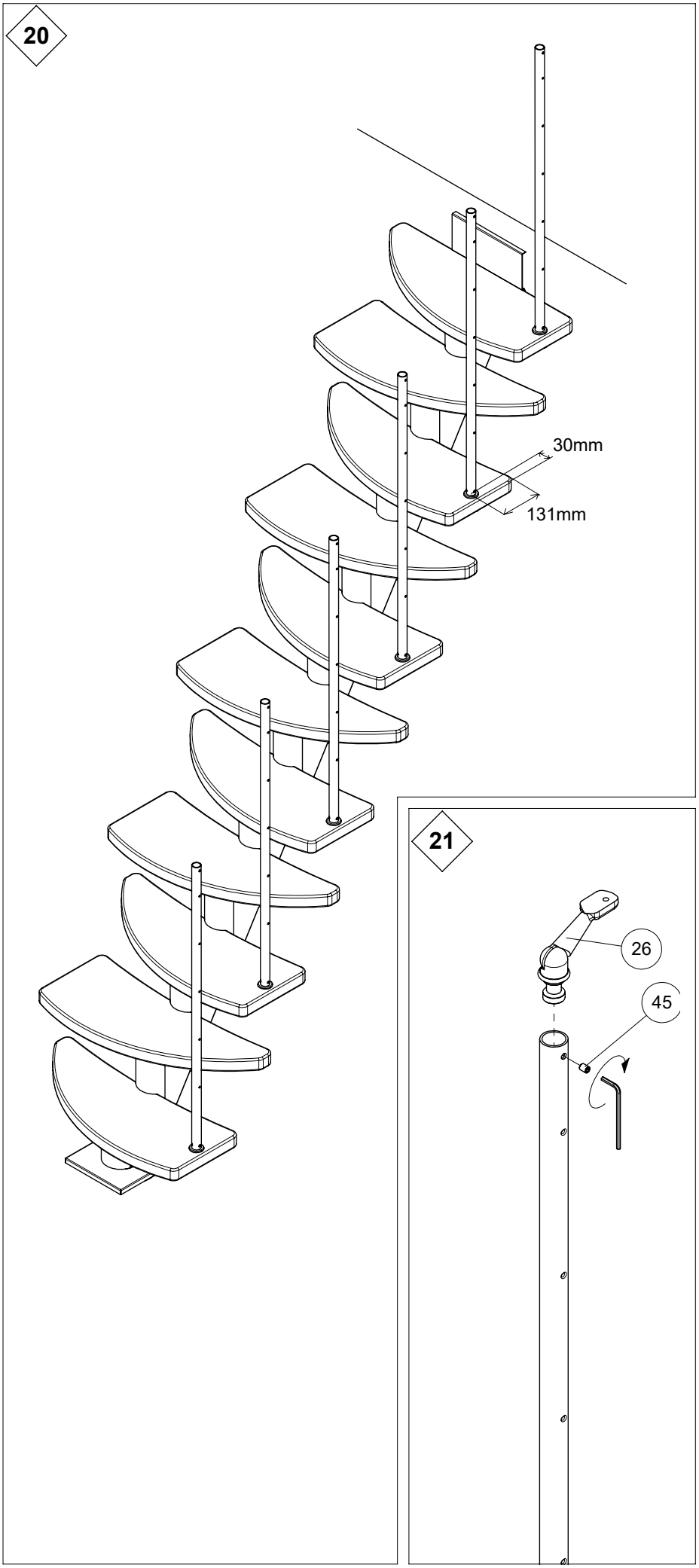
20
30mm
131mm
21
26
45

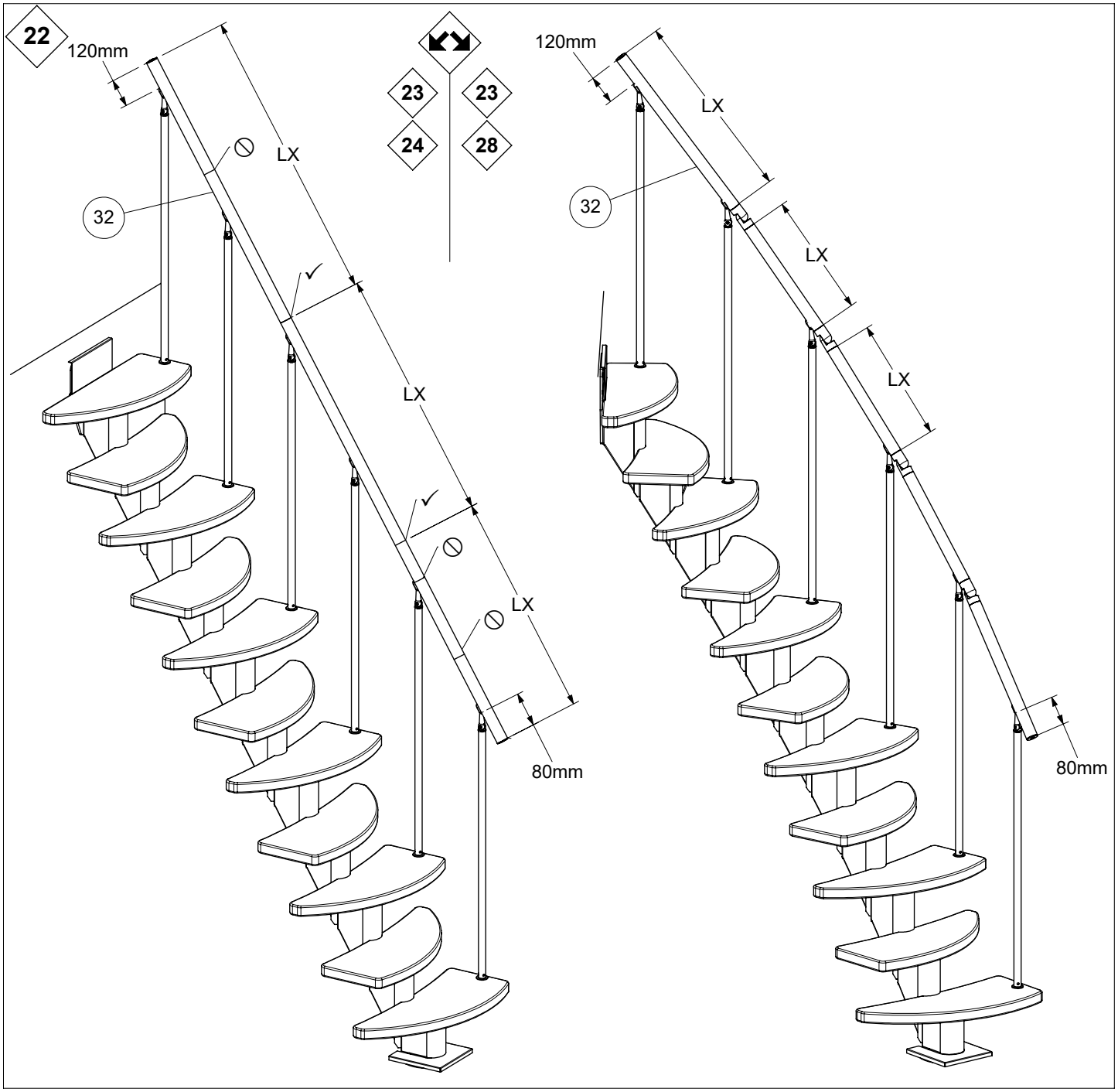
22
120mm
LX
32
23
23
24
28
120mm
LX
32
LX
LX
LX
LX
80mm
80mm

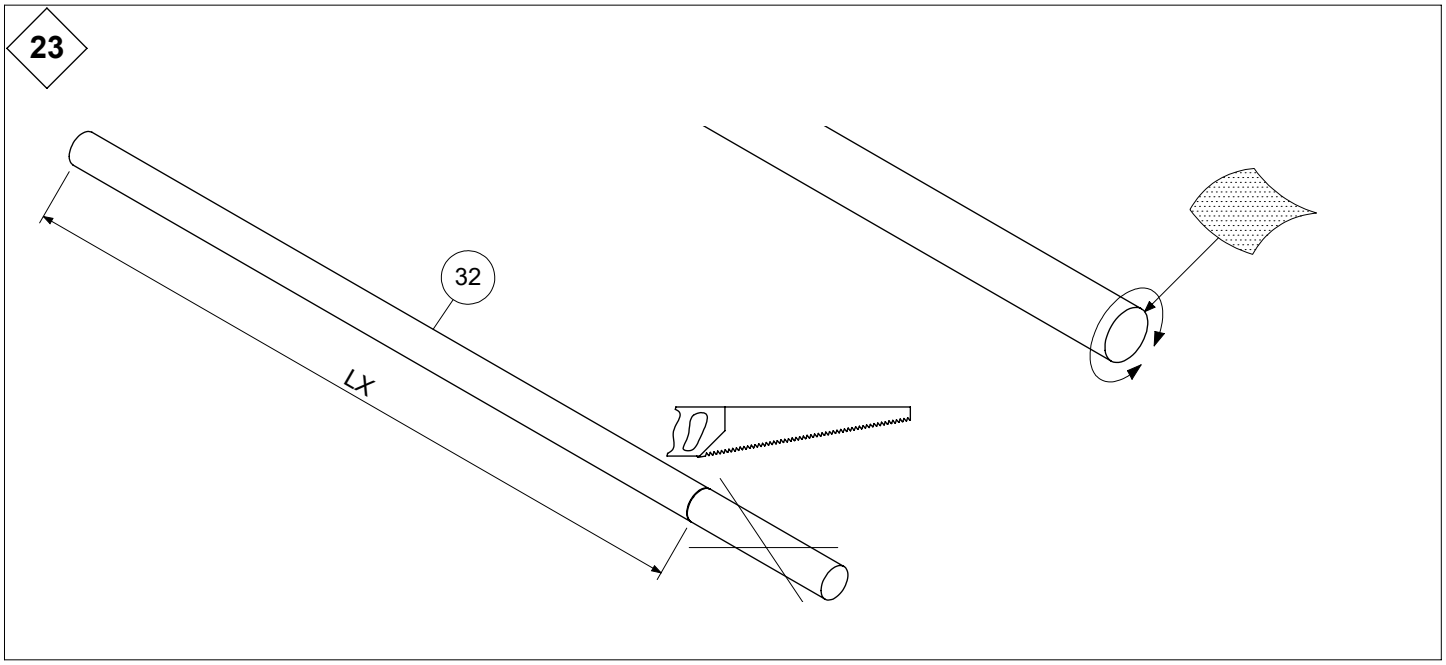
23
32
LX

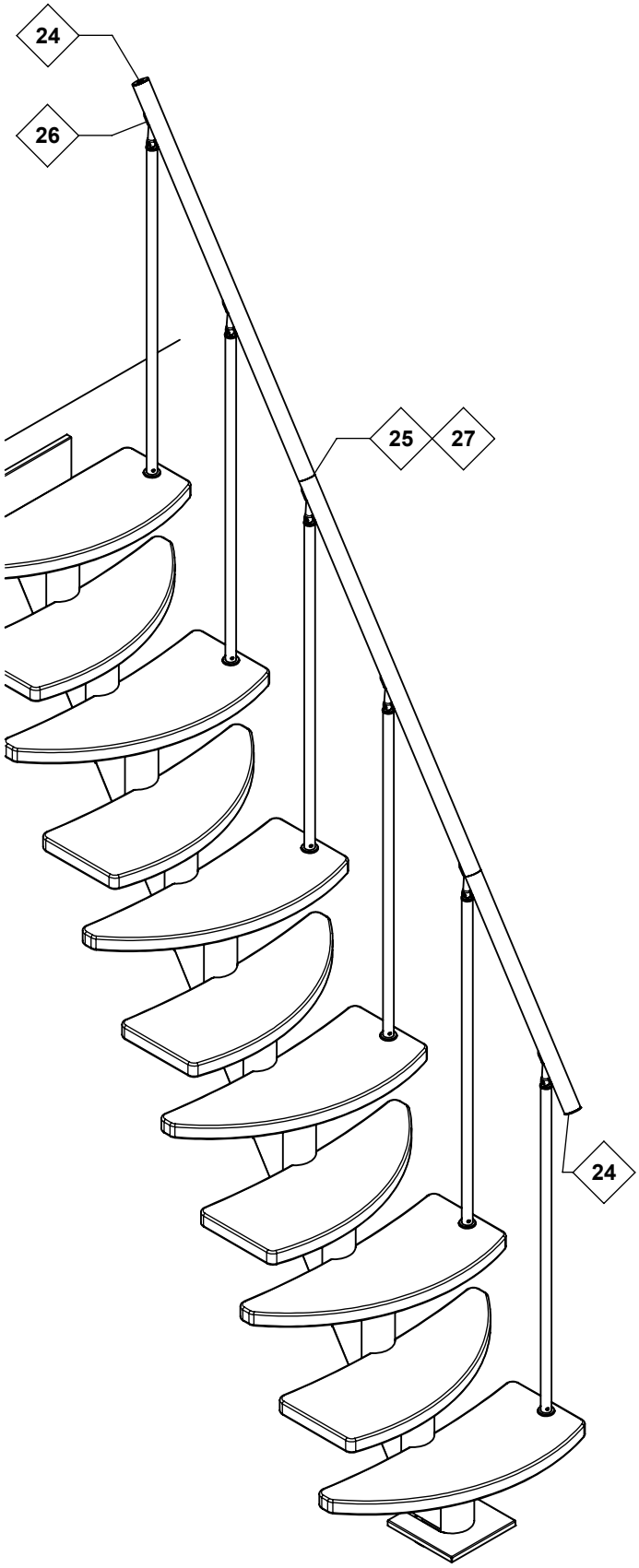
24
26
25
27
24

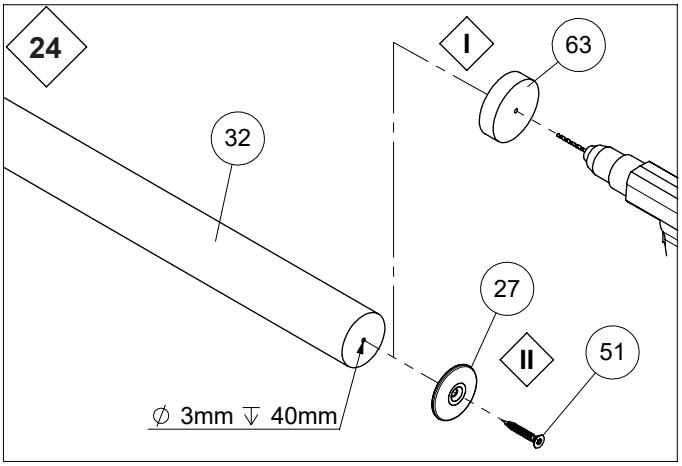
24
I
63
32
27
II
51
∅ 3mm ↓ 40mm

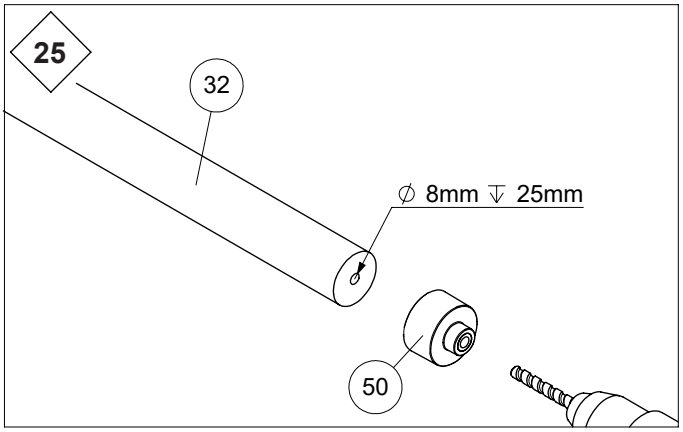
25
32
∅ 8mm ↓ 25mm
50

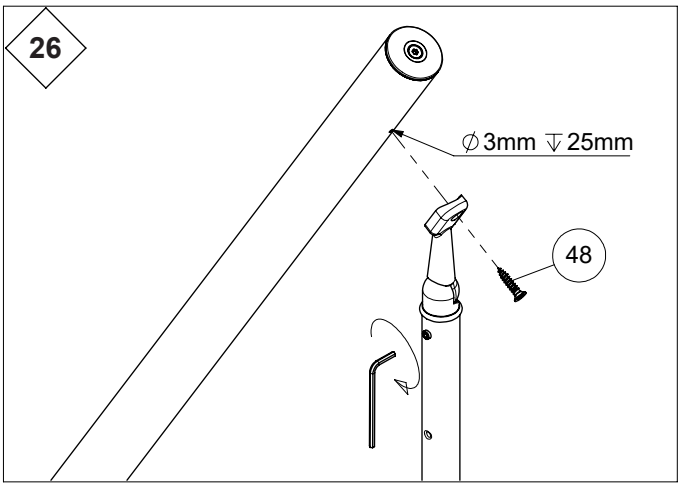
26
∅3mm ↓25mm
48

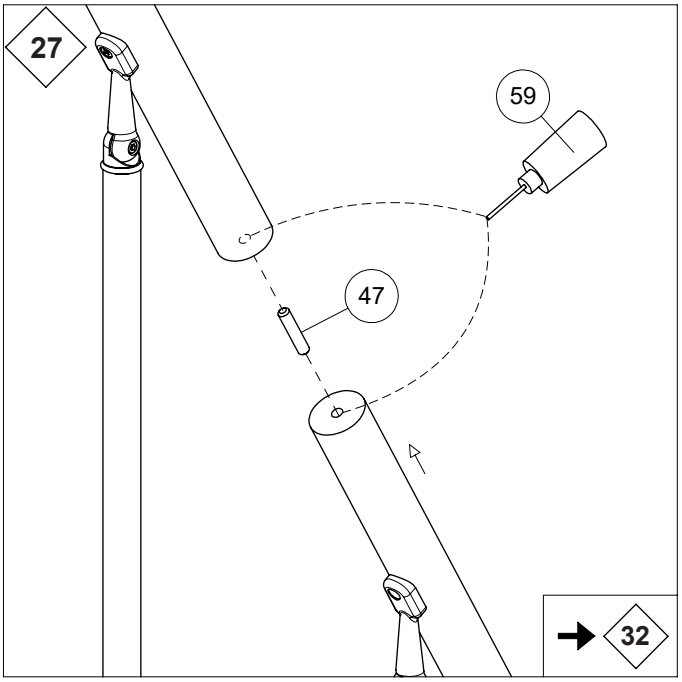
27
59
47
32

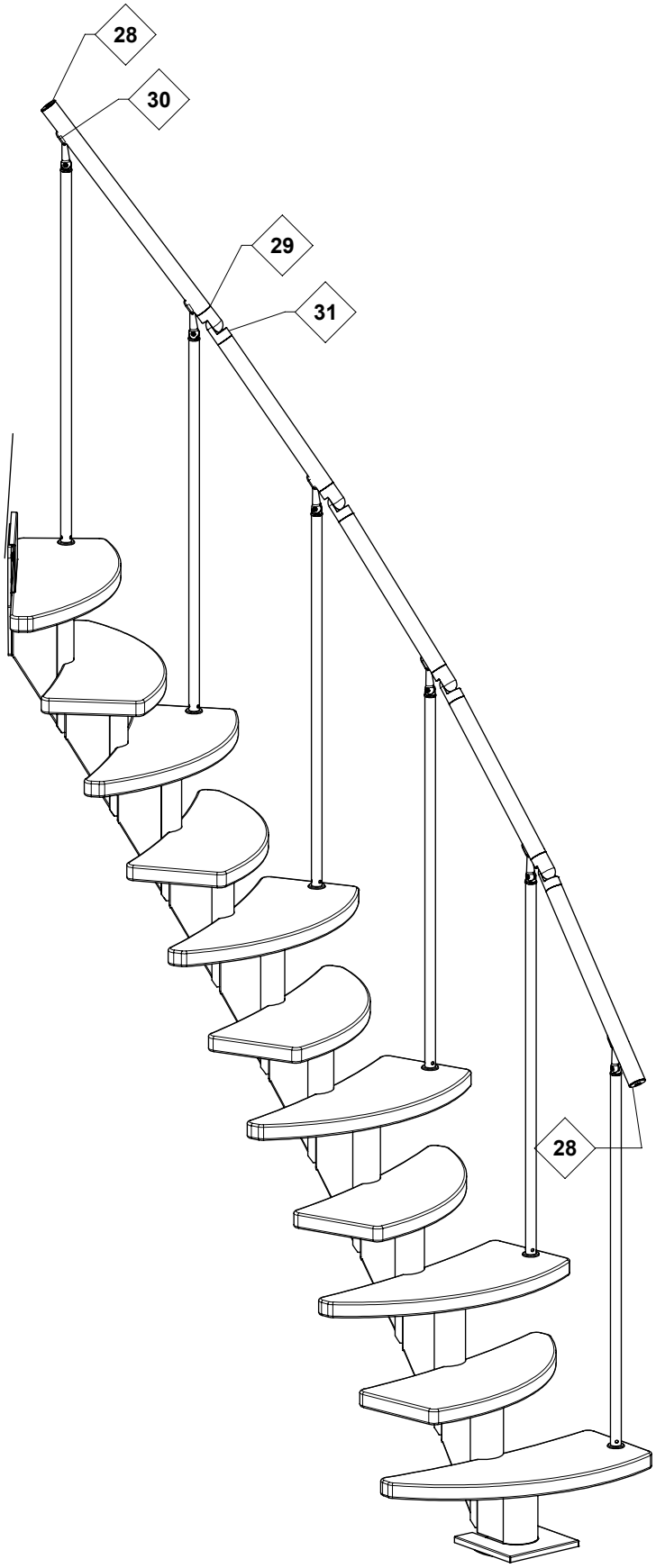
28
30
29
31
28

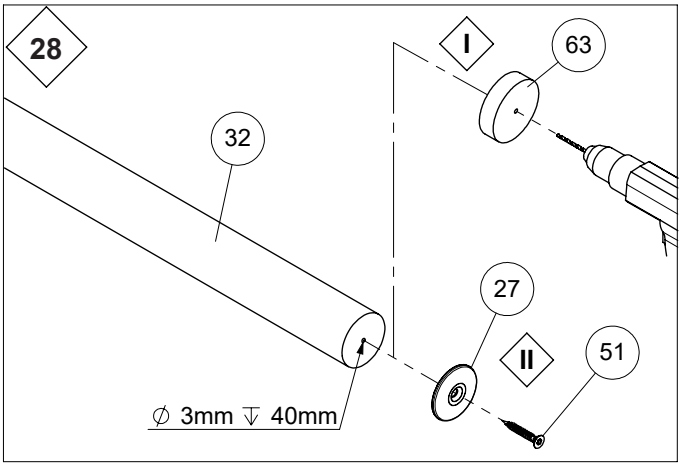
28
I
63
32
27
II
51
∅ 3mm ↧ 40mm

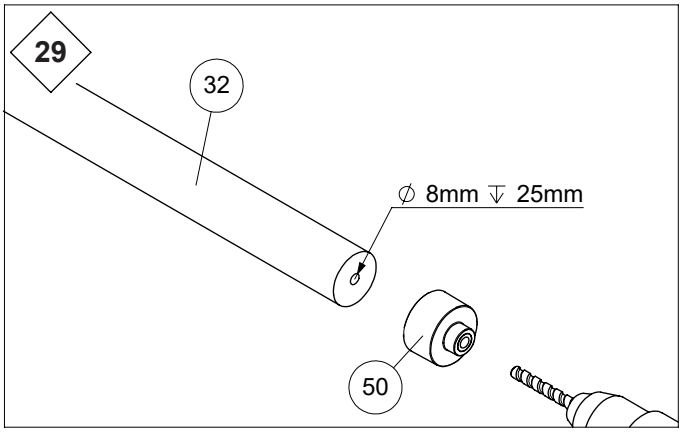
29
32
∅ 8mm ↧ 25mm
50

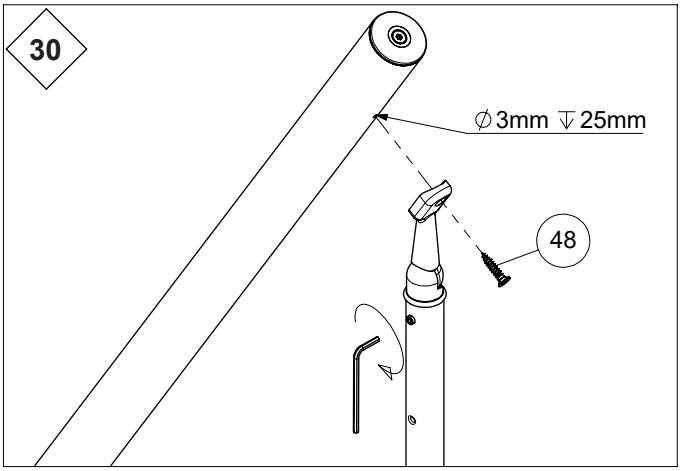
30
∅3mm ↧25mm
48

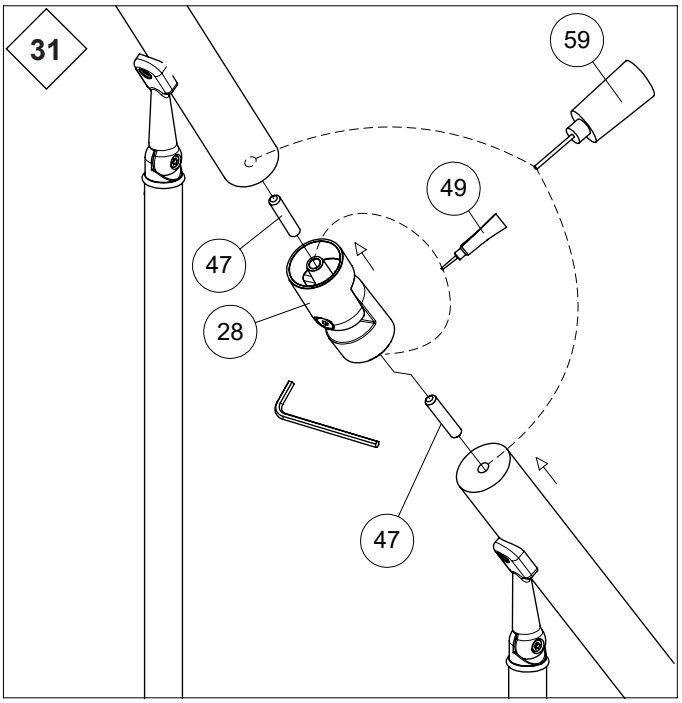
31
59
49
47
28
47

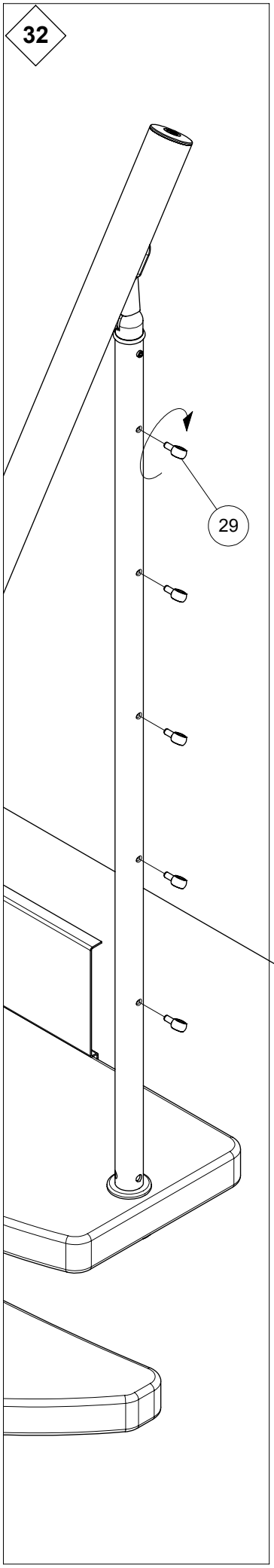
32
29

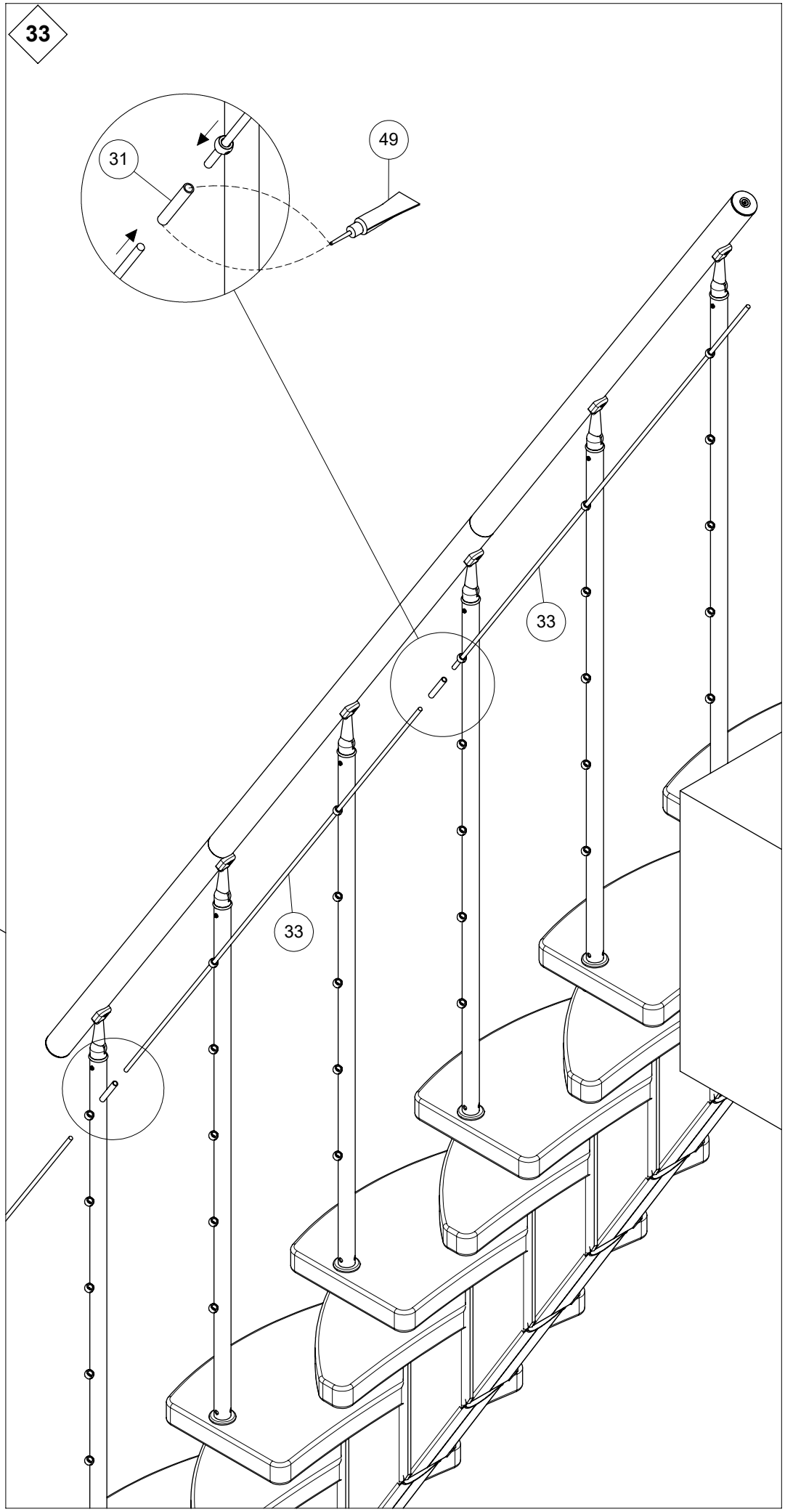
33
31
49
33
33

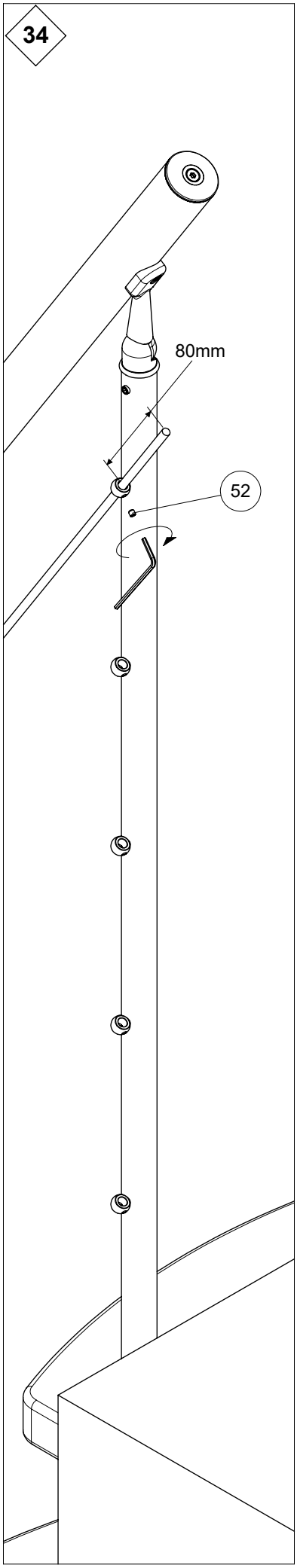
34
80mm
52

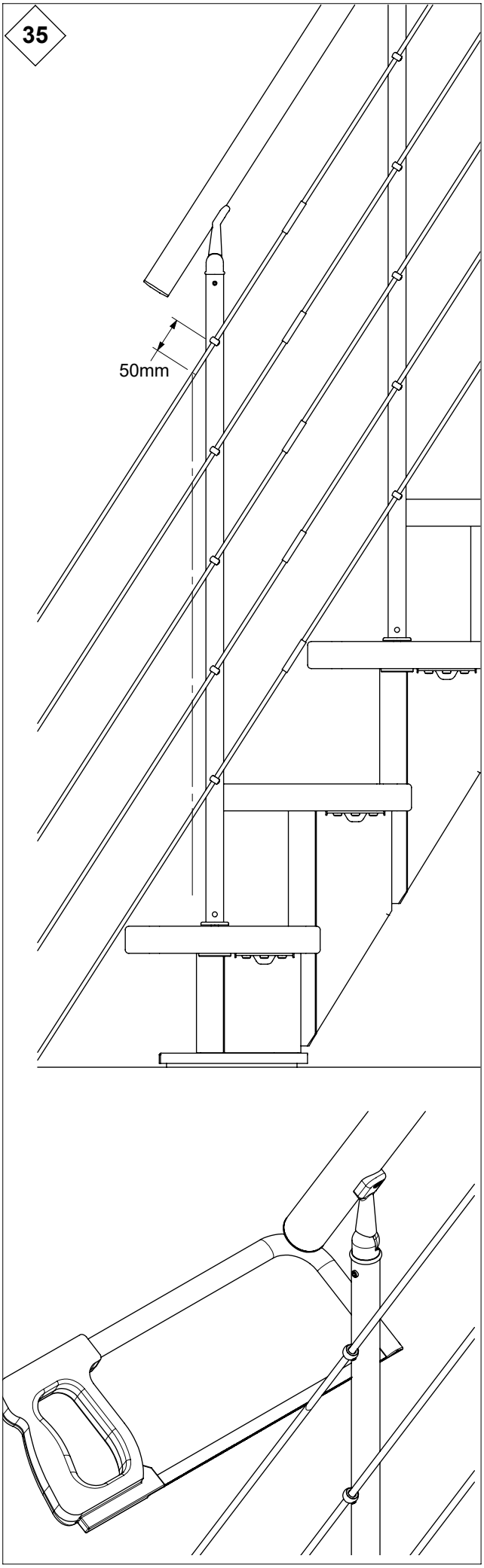
35
50mm

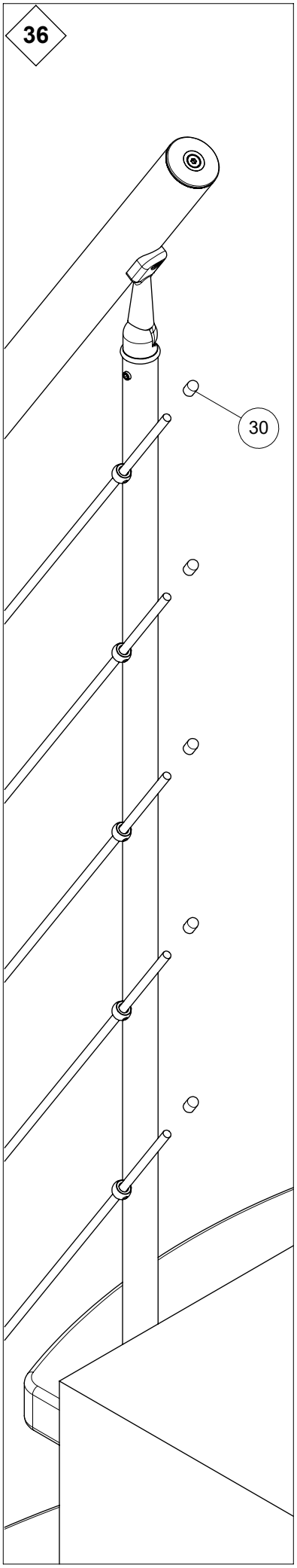
36
30