10

	10	11	12	13	14	15	16
I	20	20	30	30	30	30	30
L	-	*20/30	30	30	30	30	30
U	-	30	30	30	30	30	40
* DALLAS = 20							

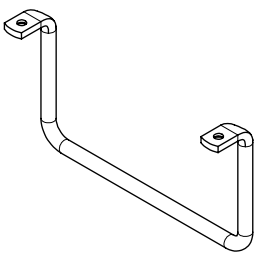

K1-1077795
K1-1077796
K1-1077797
K1-1077798

40

	10	11	12	13	14	15	16
I	40	40	60	60	60	60	60
L	-	*40/60	60	60	60	60	60
U	-	60	60	60	60	60	80
* DALLAS = 40							

K3-06022
Ø5 x 35 TX25

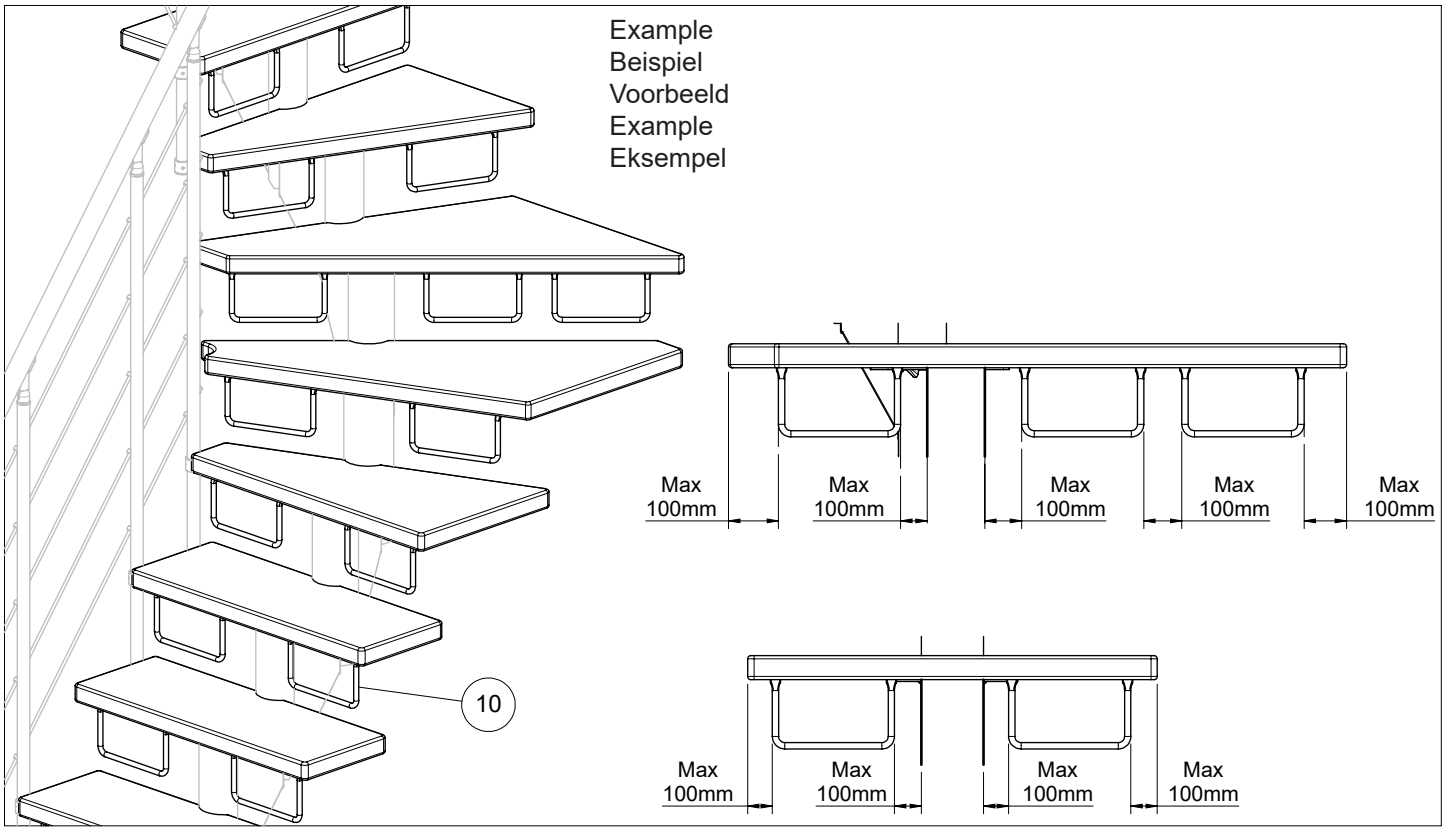

1

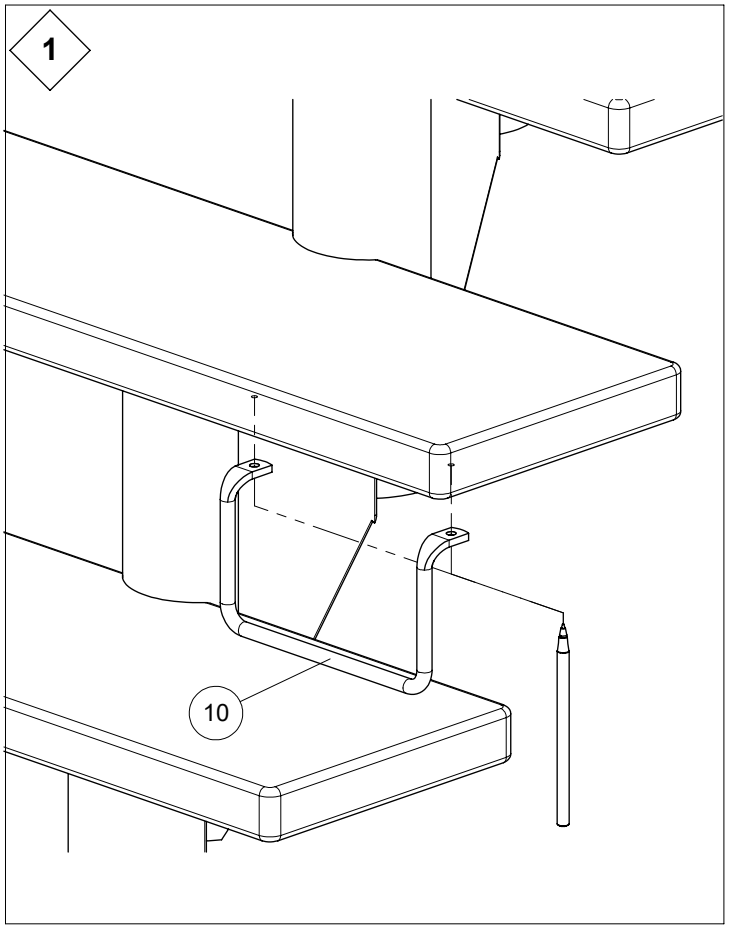
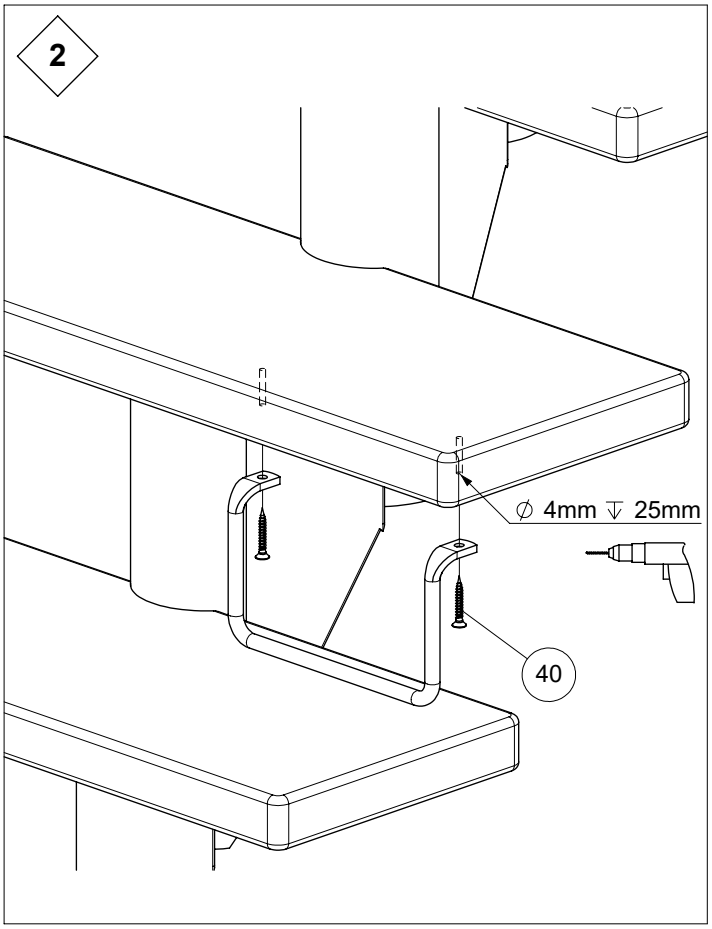
2