DOLLE®

dolle.com/classic

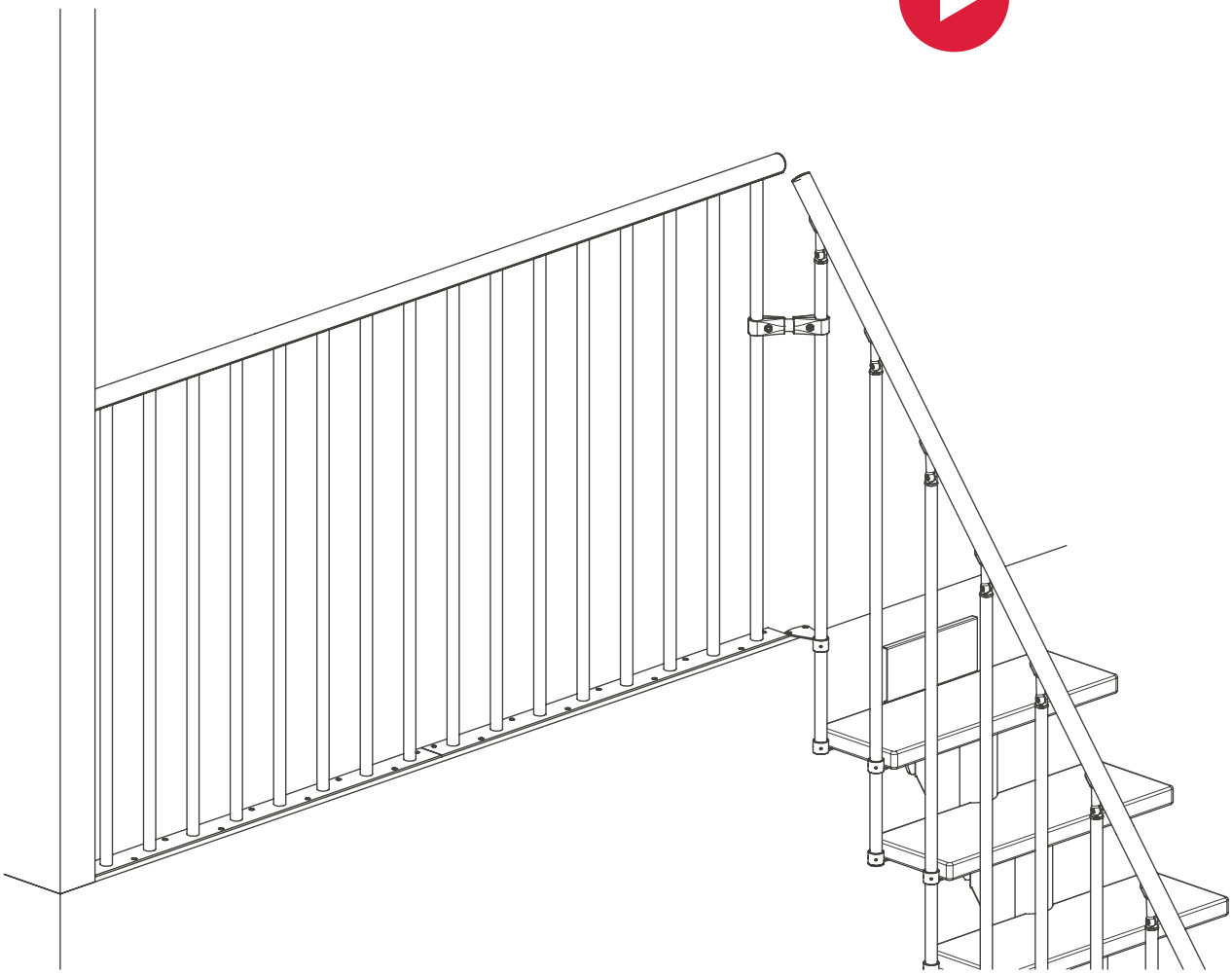

LANDING BANISTER

CLASSIC

INSTRUCTION / MONTAGEANLEITUNG
INSTRUKTION / INSTRUCCIÒN / INSTRUKCJA

SOGEM®
PART OF DOLLE GROUP

© DOLLE A/S | In the interest of technical progress we reserve the right to make changes | R1-96871 | 08/10/21

Start kit / Corner kit
Anfangspaket / Eckenpaket
Startpakket / Hoekset
Kit de départ / Kit d'angle
Startpakke / Hjørnepakke

8

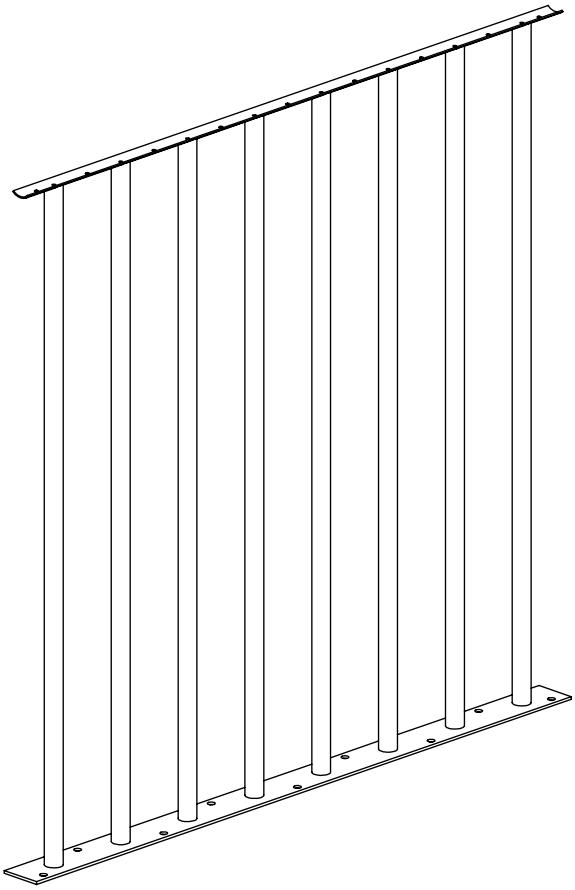

x 1
K2-1077675 *RAL 7016*
K2-1077676 *RAL 9005*
K2-1077677 *Pearl grey*
K2-1077678 *RAL 9016*

9

x 1
K1-1077680 *RAL 7016*
K1-1077681 *RAL 9005*
K1-1077682 *Pearl grey*
K1-1077683 *RAL 9016*

27

x 1
K1-1077150 *RAL 7016*
K1-1077151 *RAL 9005*
K1-1077152 *Pearl grey*
K1-1077153 *RAL 9016*

36

x 1
K2-1077155 *RAL 7016*
K2-1077156 *RAL 9005*
K2-1077157 *Pearl grey*
K2-1077158 *RAL 9016*

37

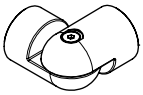

x 1
K2-1077180 *RAL 7016*
K2-1077181 *RAL 9005*
K2-1077182 *Pearl grey*
K2-1077183 *RAL 9016*

32

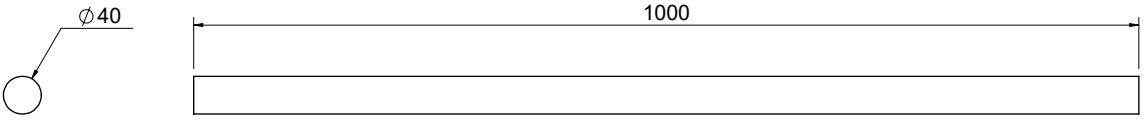

x 1

34

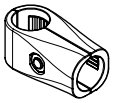

x 2
K2-1077170 *RAL 7016*
K2-1077171 *RAL 9005*
K2-1077172 *Pearl grey*
K2-1077173 *RAL 9016*

35

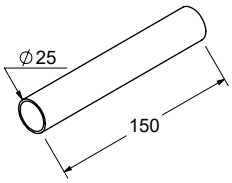

x 1
K1-1077165 *RAL 7016*
K1-1077166 *RAL 9005*
K1-1077167 *Pearl grey*
K1-1077168 *RAL 9016*

38

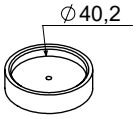

x 1
K1-01620

47

x 8
R3-91415
Ø8 x 40

48

x 12
K3-06027
Ø5 x 50 TX25

49

x 13
K3-08002
Ø8 x 40

50

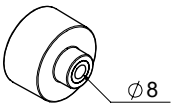

x 1
K1-01810

51

x 9
K3-06008
Ø5 x 25

56

x 2
K3-06290
Ø4,5 x 40 TX20

57

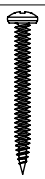

x 1
K3-06286
Ø5 x 50

59

Wood glue
Holzkleber
Colle à bois
Trælim
Houtlijm

x 1
K3-90005

60

Strong glue
Superkleber
Seconde lijm
Colle forte
Superlim

x 1
K3-90001

61

x 1
K3-10226 *RAL 9016*
K3-10405 *RAL 9005*
K3-10226 *FZB/BZP*
Ø5 x 35 TX25

Extension kit
Ergänzungspaket
Uitbreidingsset
Kit de suite
Forlængerpakke

8

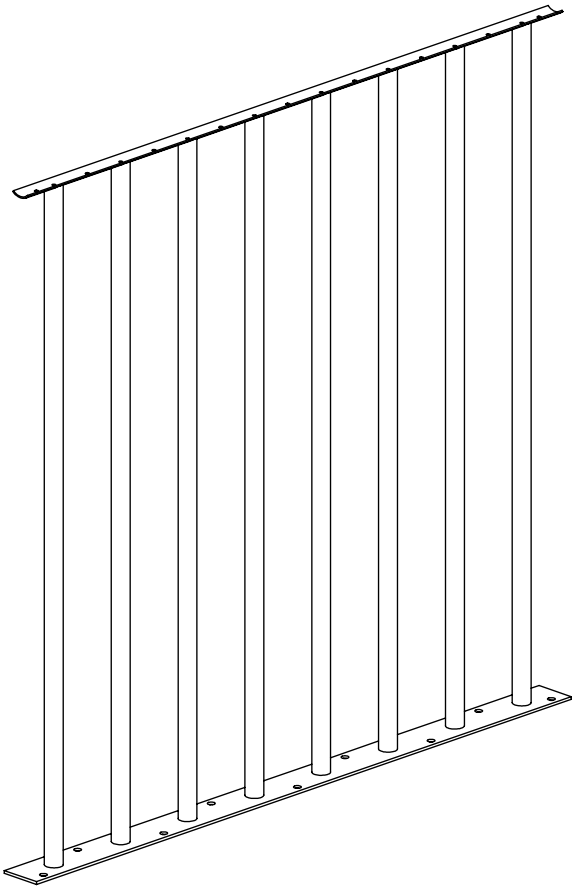

x 1
K2-1077675 *RAL 7016*
K2-1077676 *RAL 9005*
K2-1077677 *Pearl grey*
K2-1077678 *RAL 9016*

48

x 9
K3-06027
Ø5 x 50 TX25

49

x 9
K3-08002
Ø8 x 40

51

x 9
K3-06008
Ø5 x 25

32

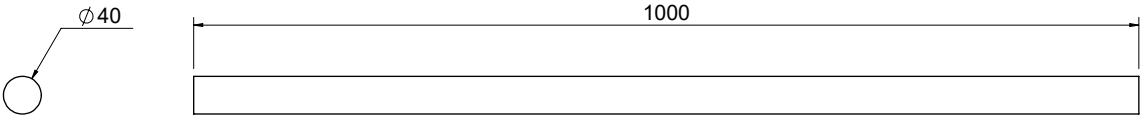

x 1

Tools not included!
Werkzeuge nicht enthalten!
Gereedschap niet inbegrepen!
Outils non inclus!
Værktøj ikke inkluderet!

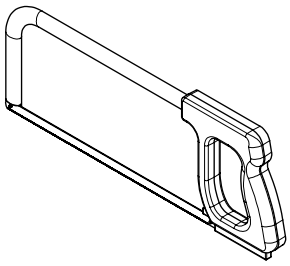

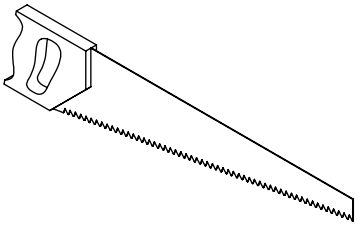

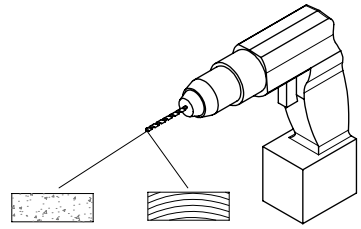

∅ 8mm
∅ 3mm
∅ 8mm

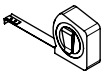

PZ2
TX20
TX25

1

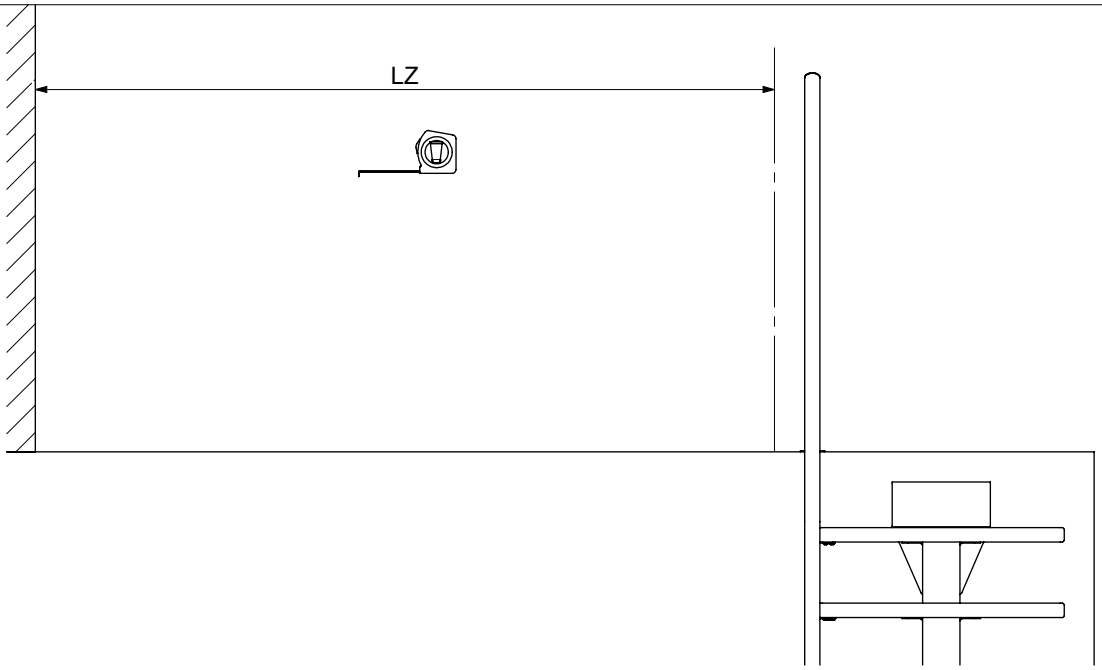

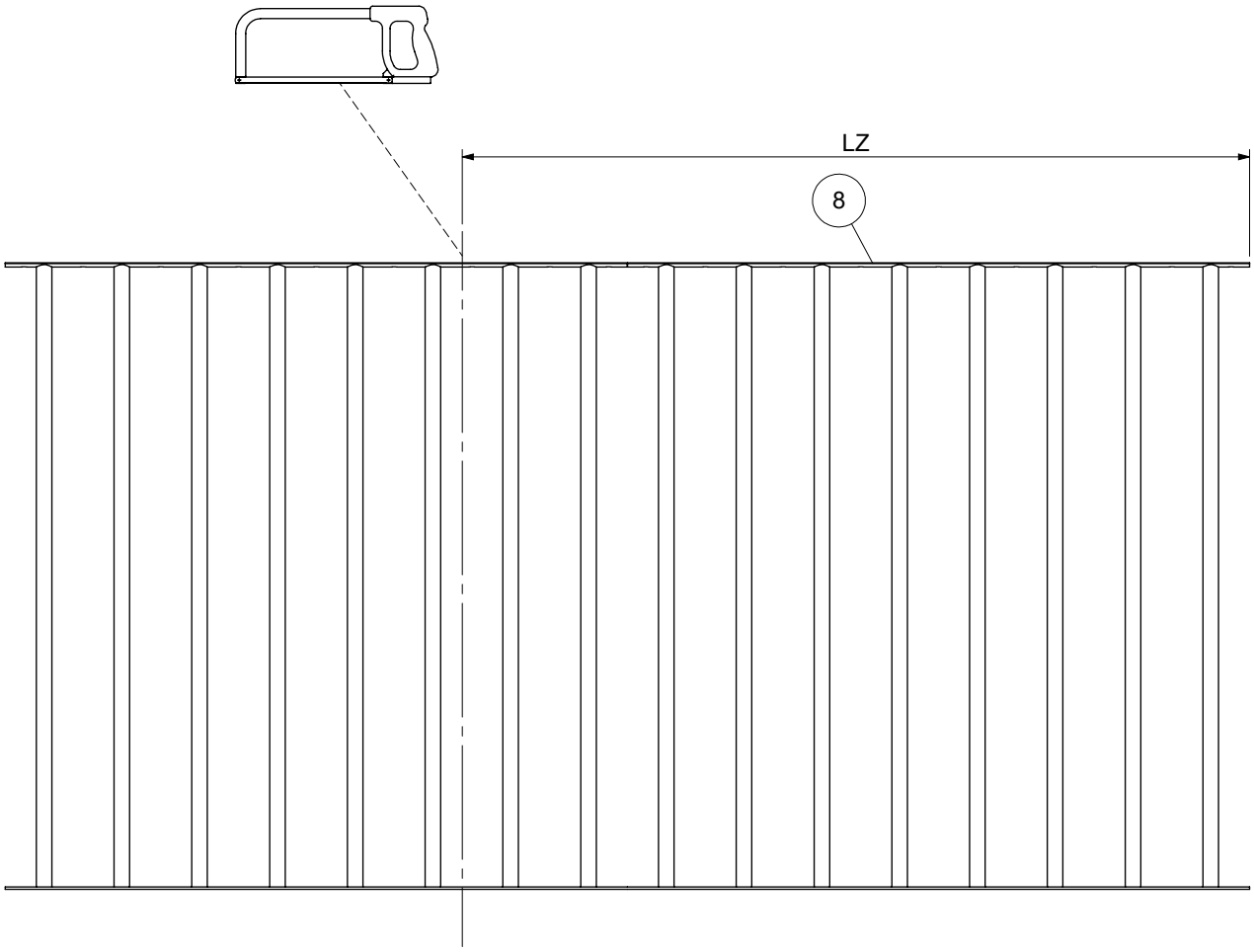

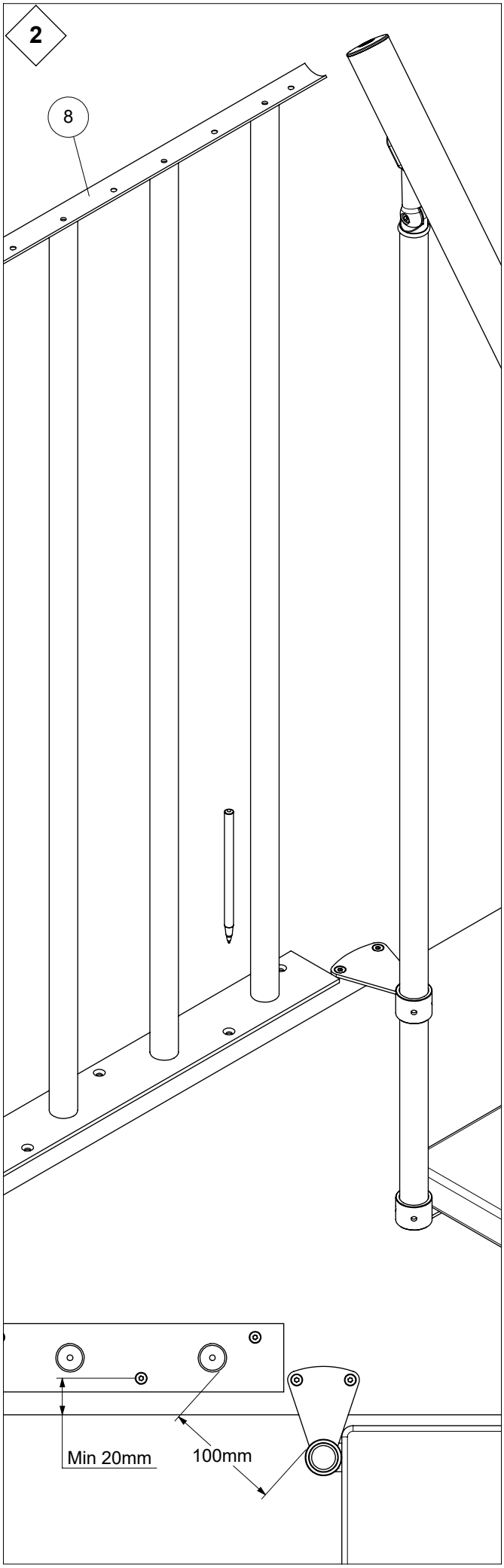
2
8
Min 20mm
100mm

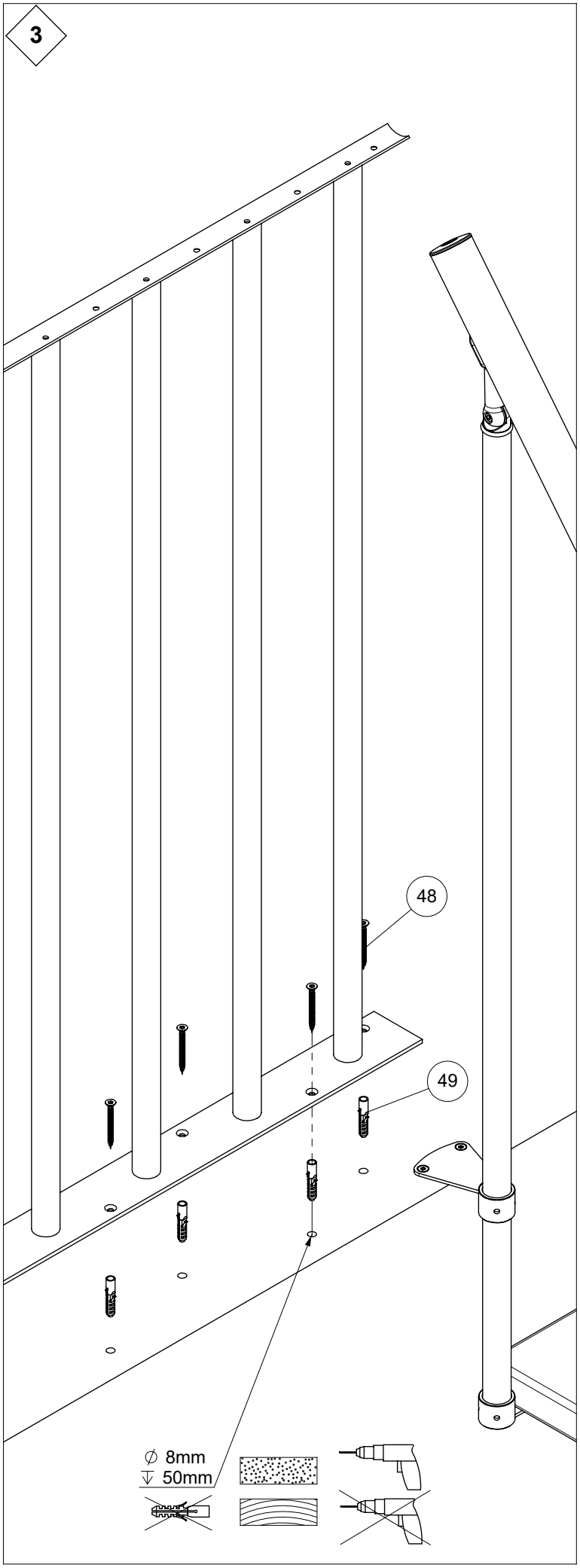
3
48
49
∅ 8mm
50mm

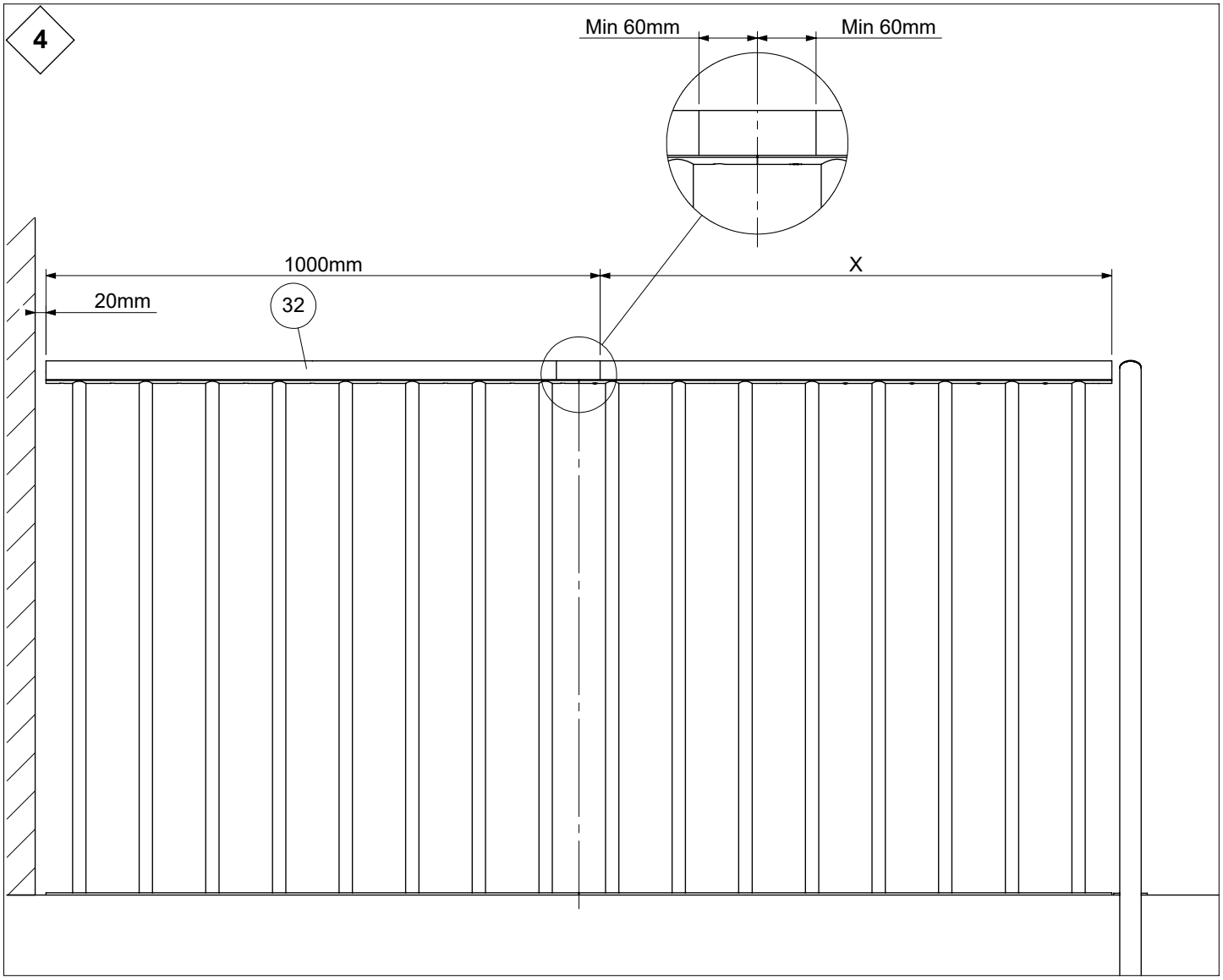
4
Min 60mm
Min 60mm
1000mm
X
20mm
32

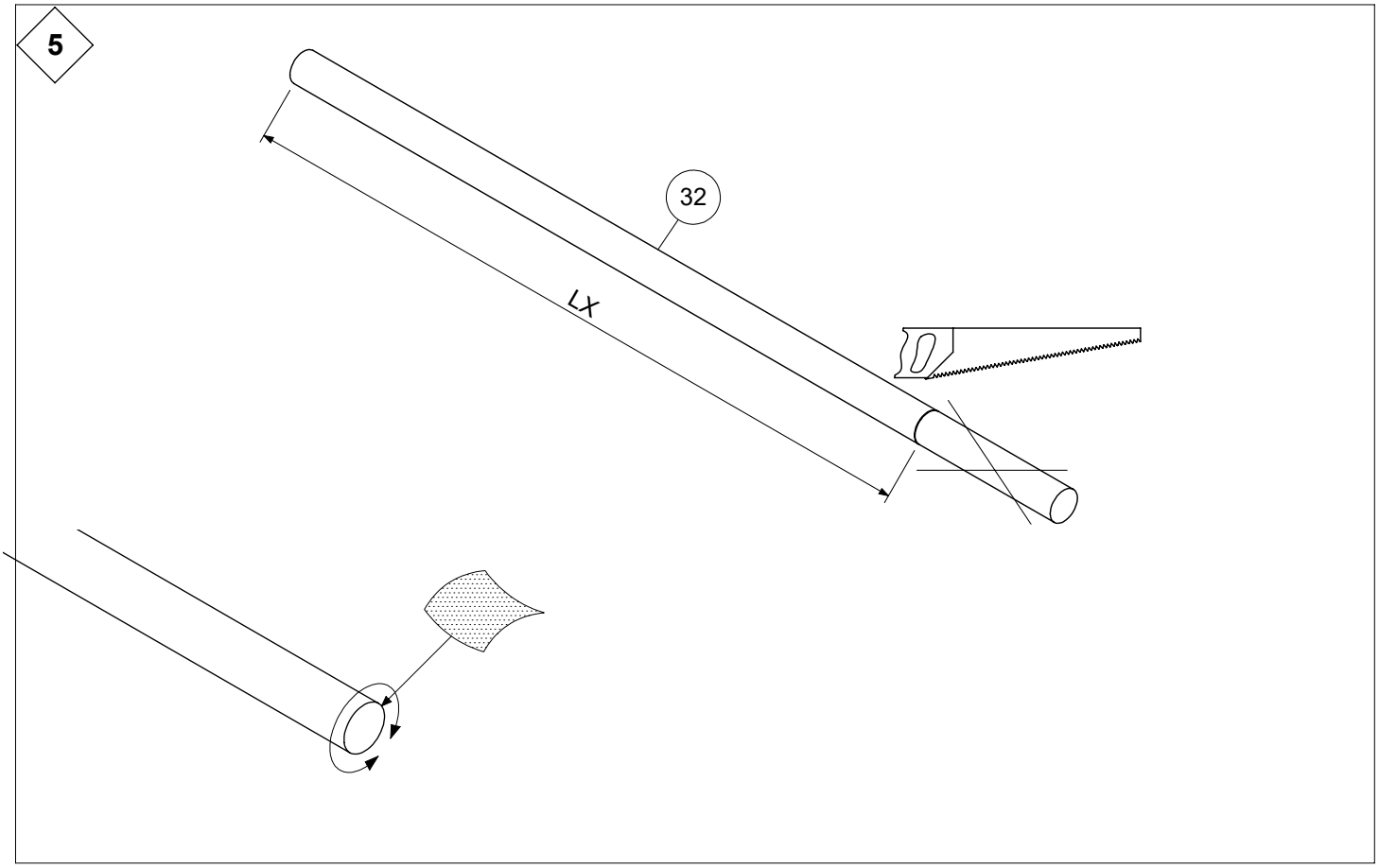
5
32
LX

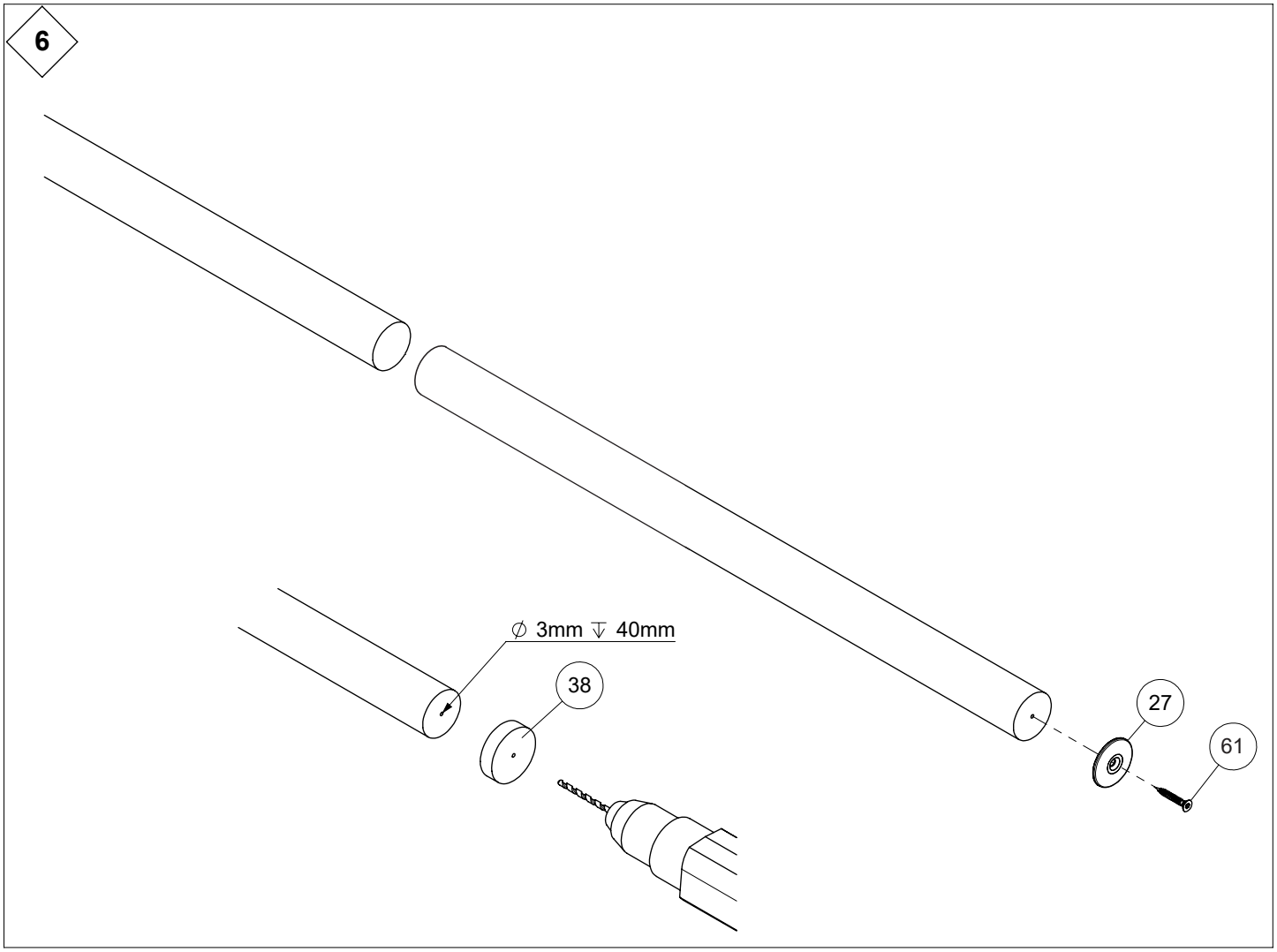
6
∅ 3mm ↧ 40mm
38
27
61

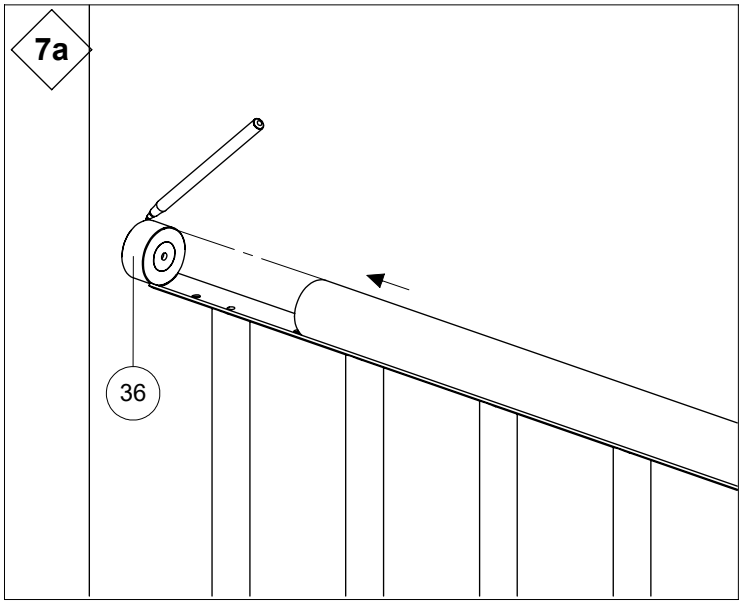
7a
36

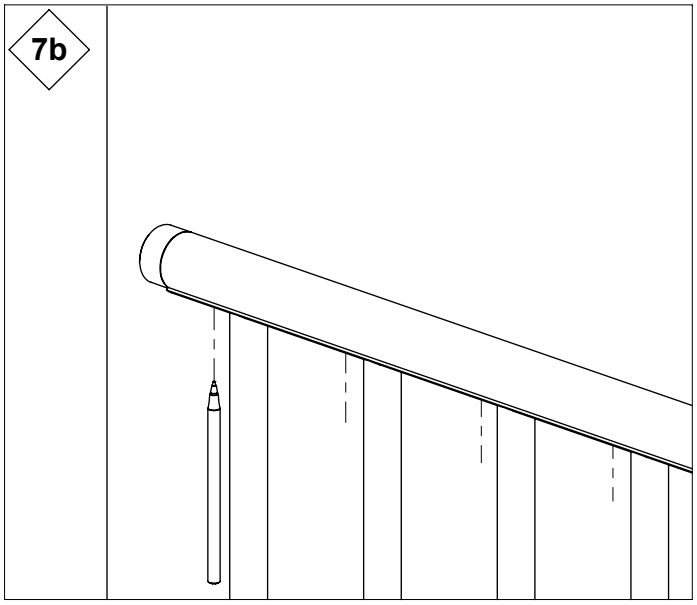
7b

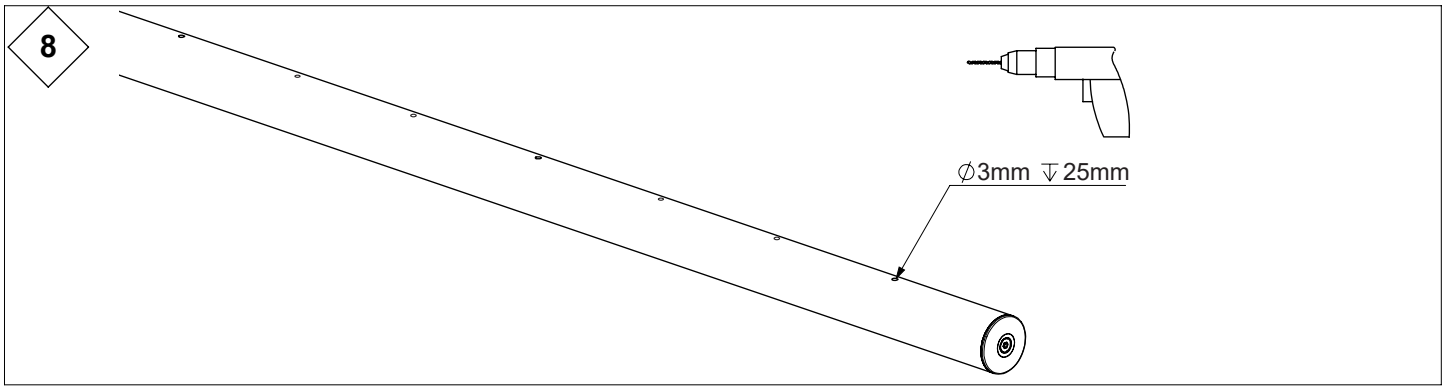
8
∅3mm ↧25mm

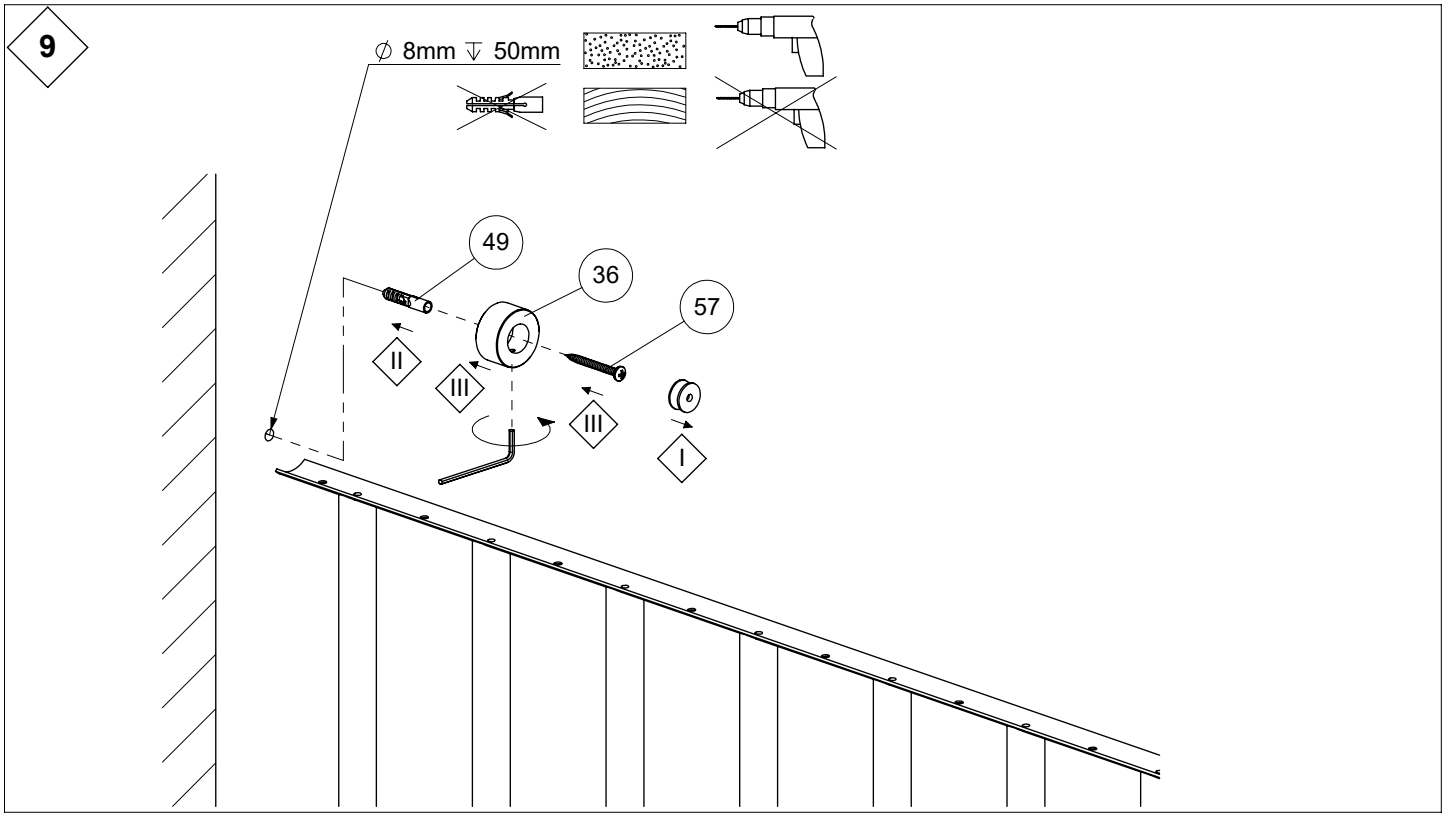
9
∅ 8mm ↓ 50mm
49
36
57
II
III
III
I

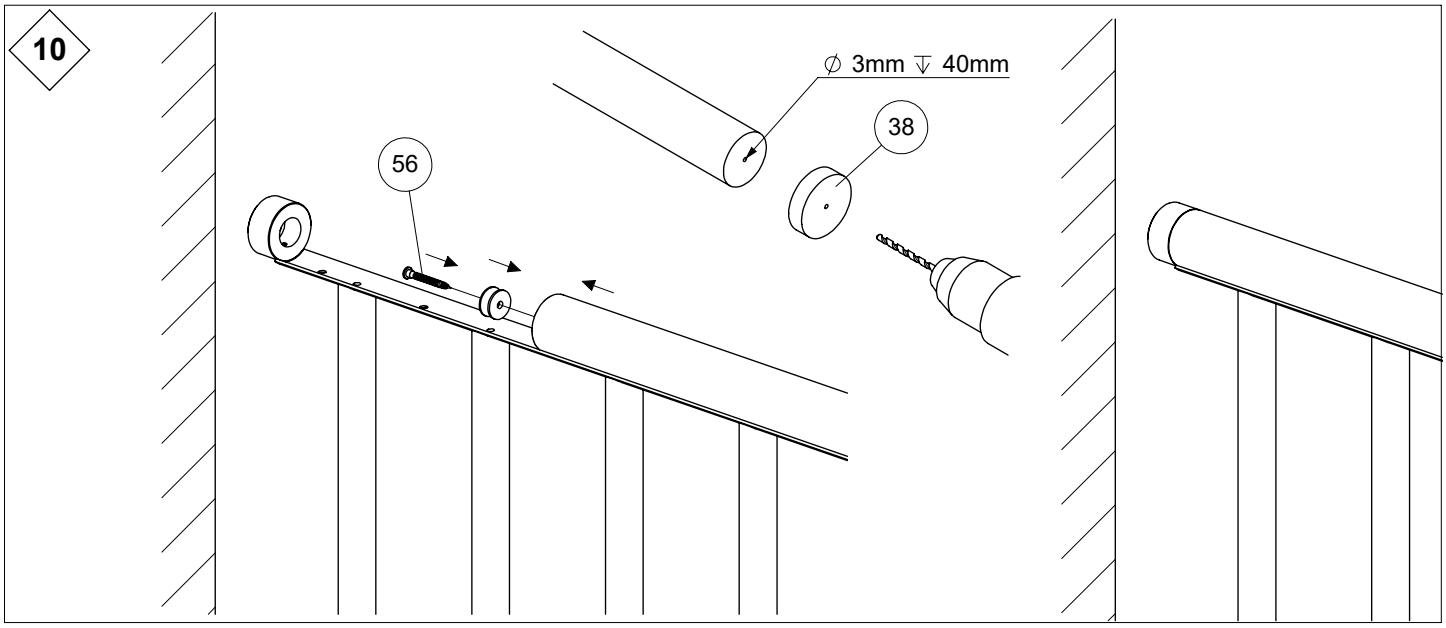
10
∅ 3mm ↓ 40mm
38
56

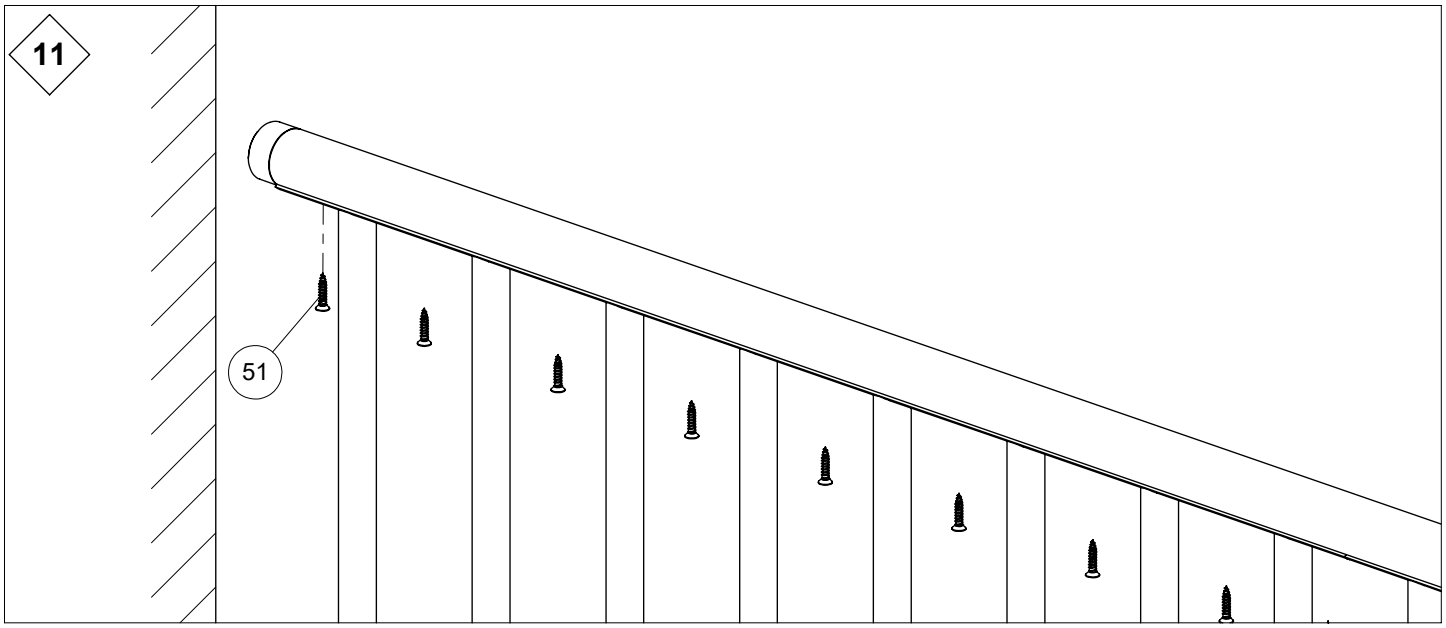
11
51

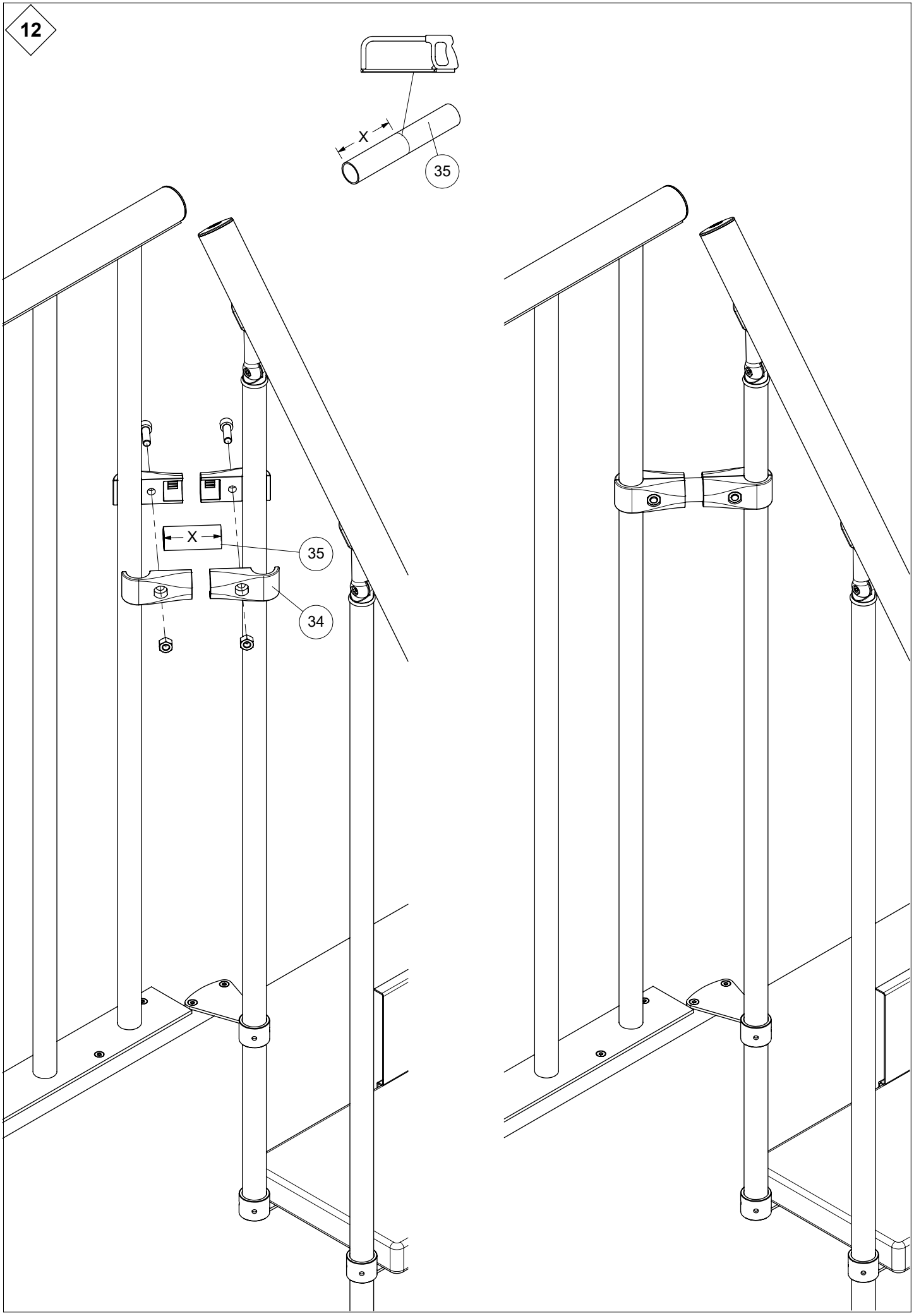
12
X
35
X
35
34

13

Extension kit
Ergänzungspaket
Uitbreidingsset
Kit de suite
Forlængerpakke

Start kit / Corner kit
Anfangspaket / Eckenpaket
Startpakket / Hoekset
Kit de départ / Kit d'angle
Startpakke / Hjørnepakke

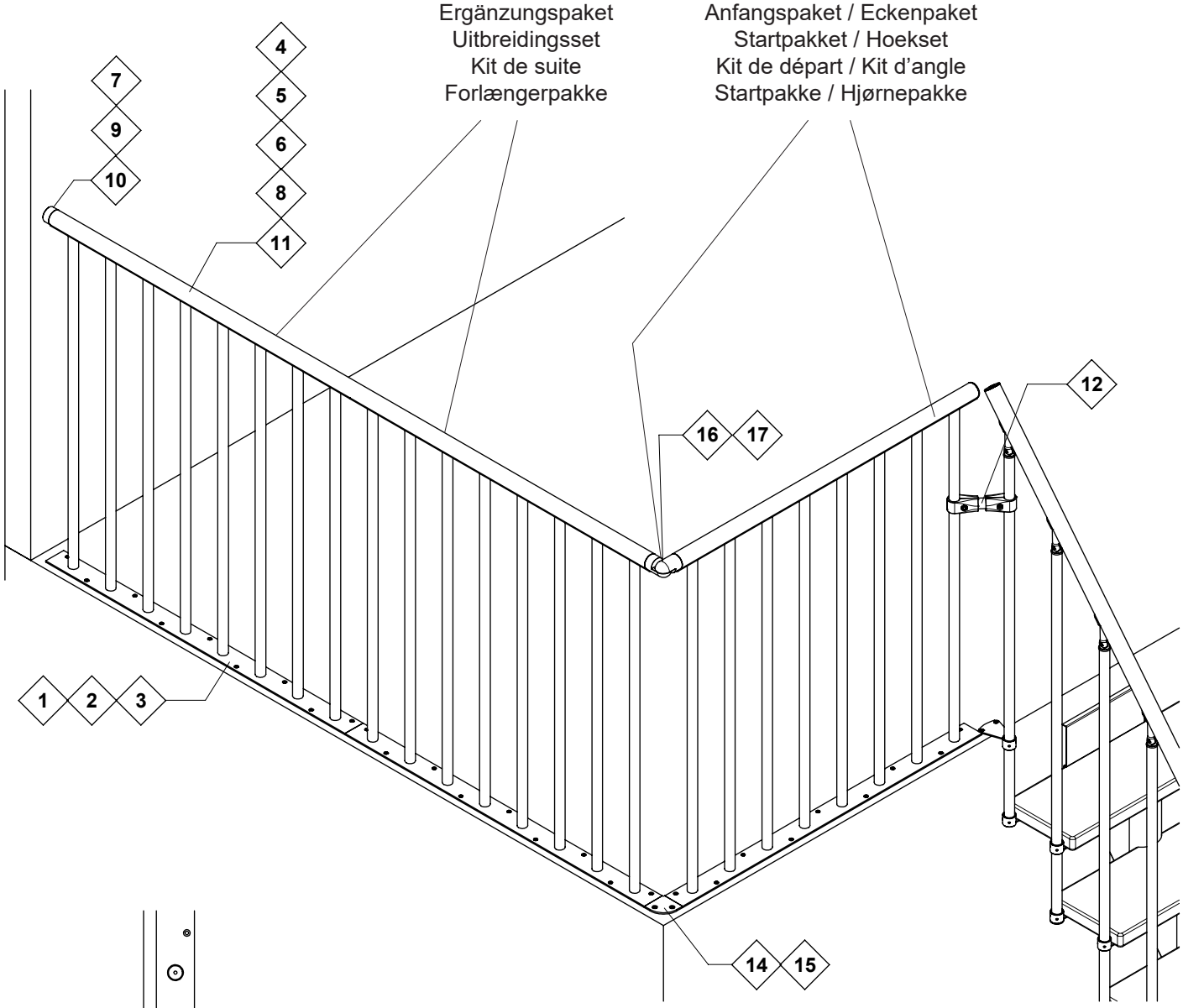

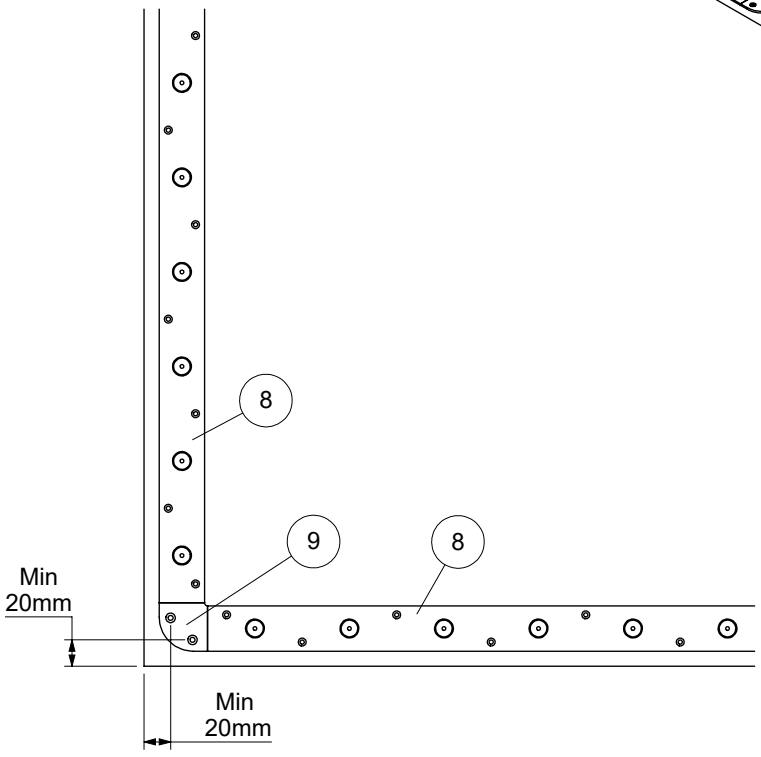

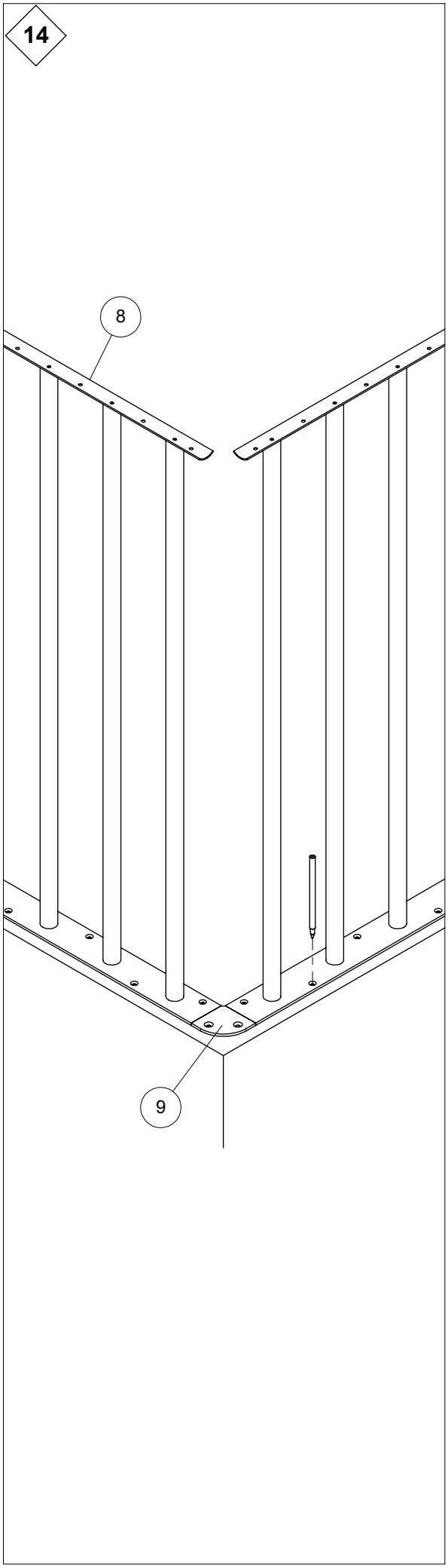
14
8
9

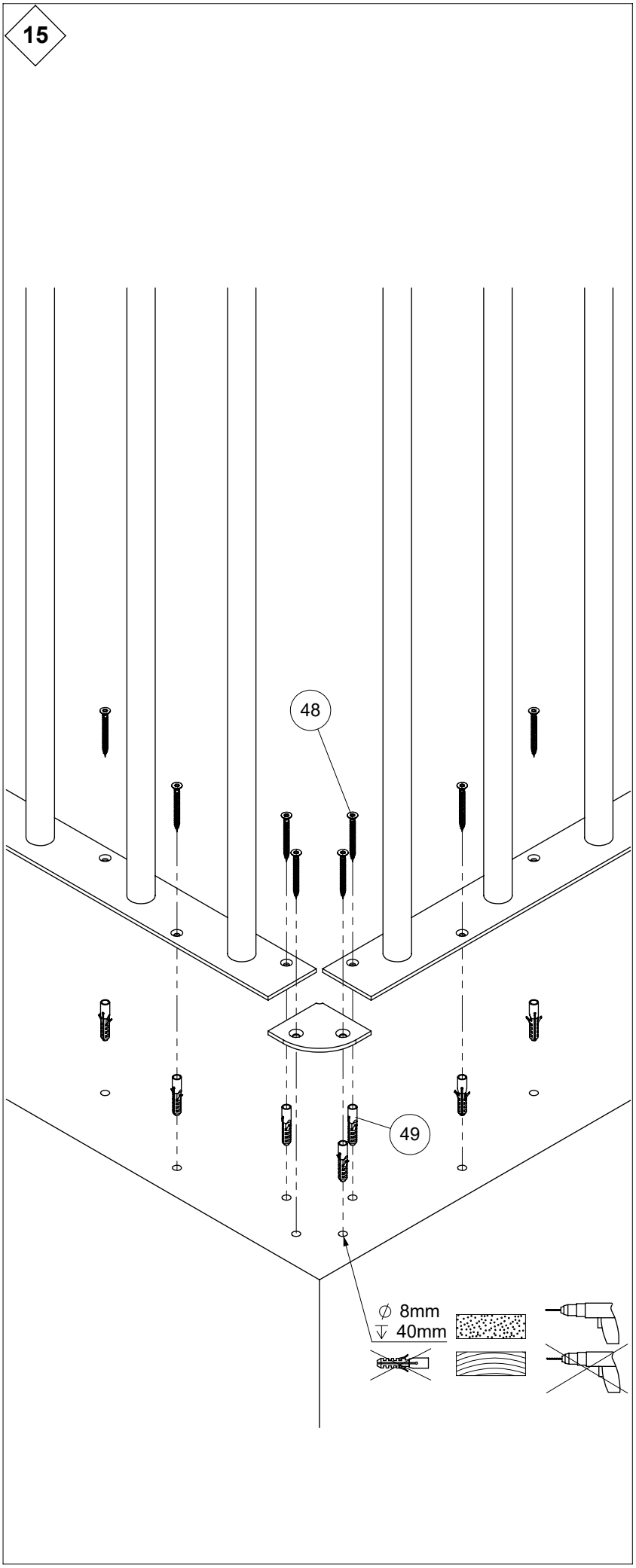
15
48
49
∅ 8mm
40mm

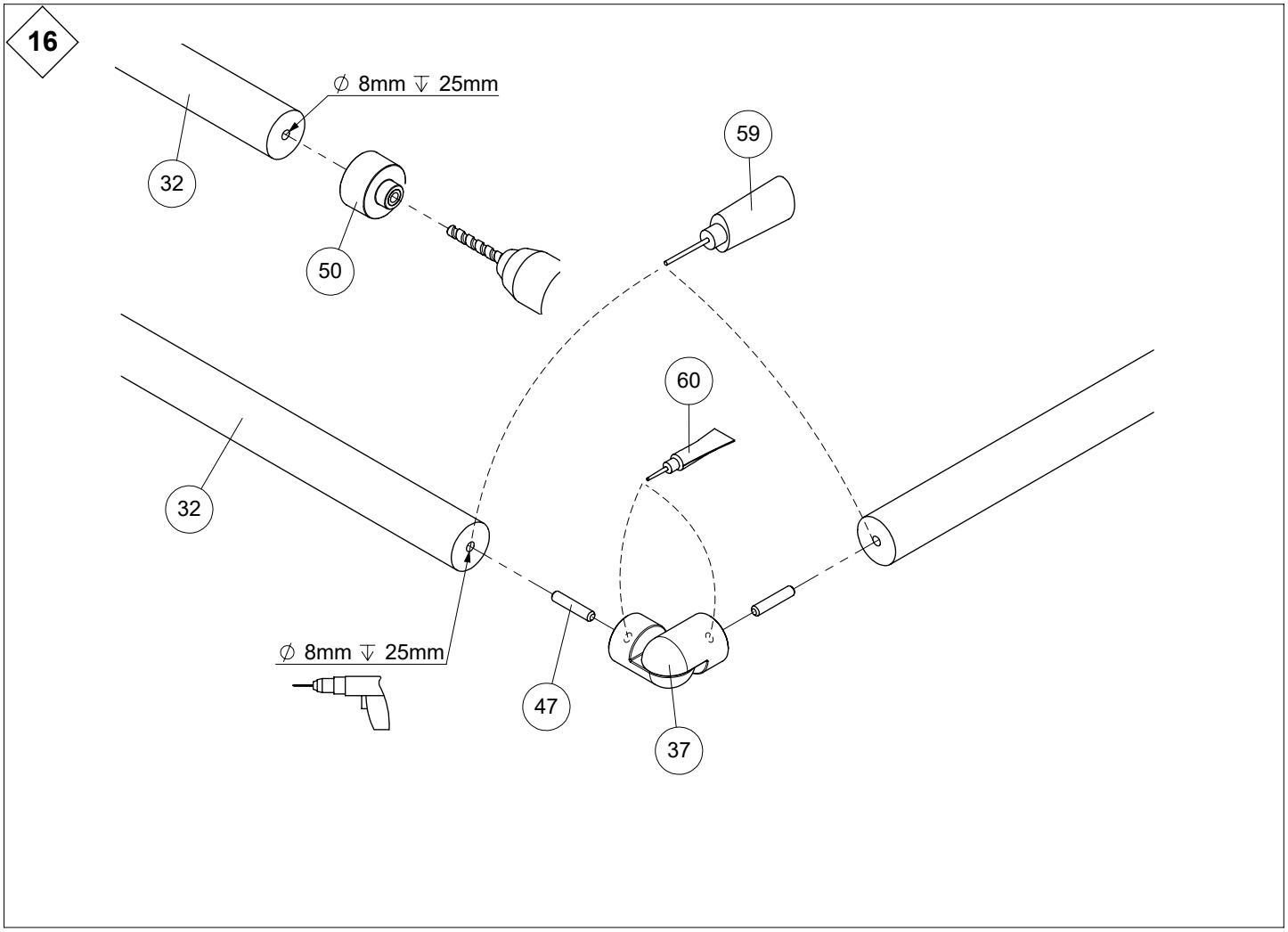
16
∅ 8mm ↧ 25mm
32
50
59
60
32
∅ 8mm ↧ 25mm
47
37

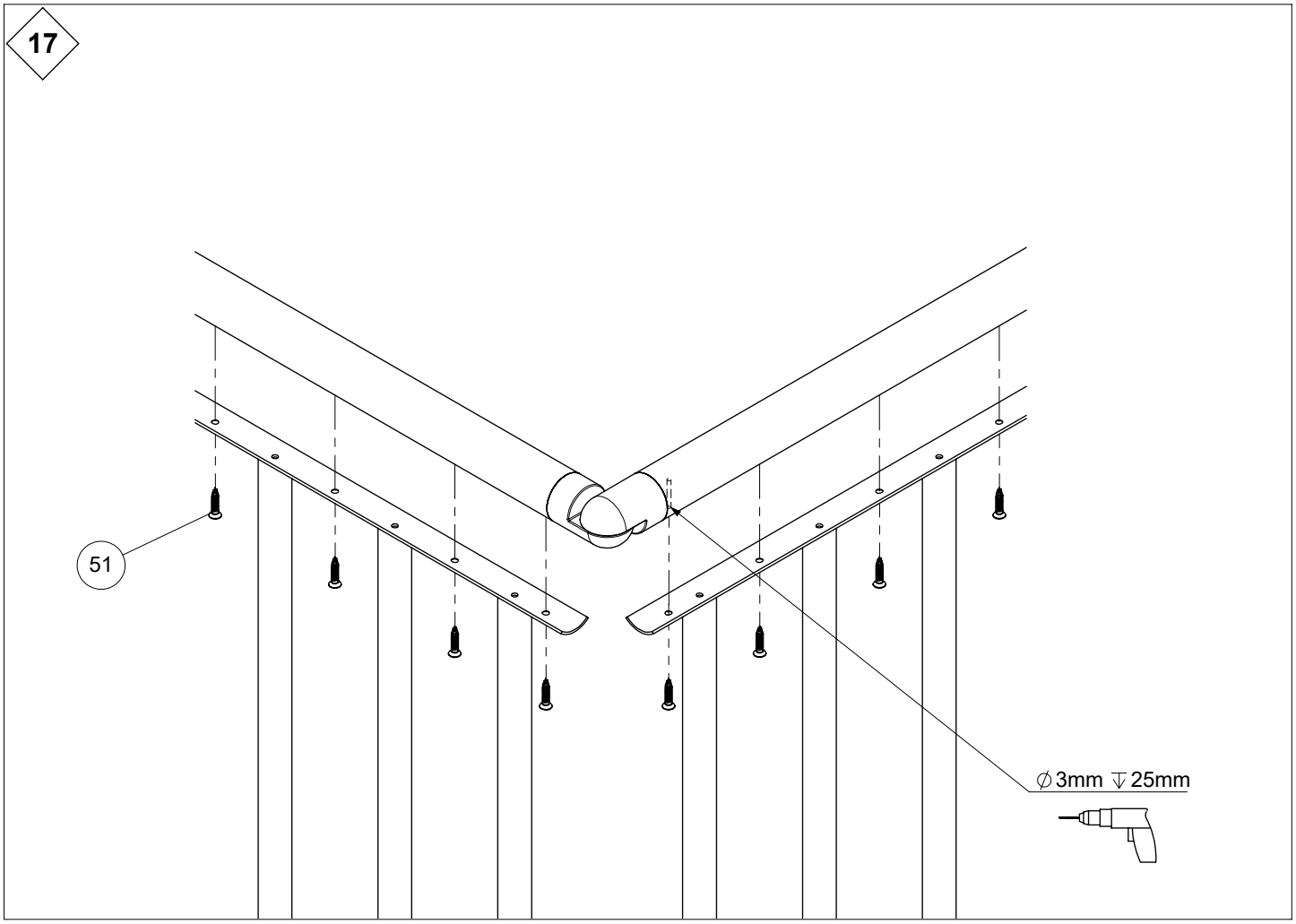
17
51
∅3mm ↧25mm