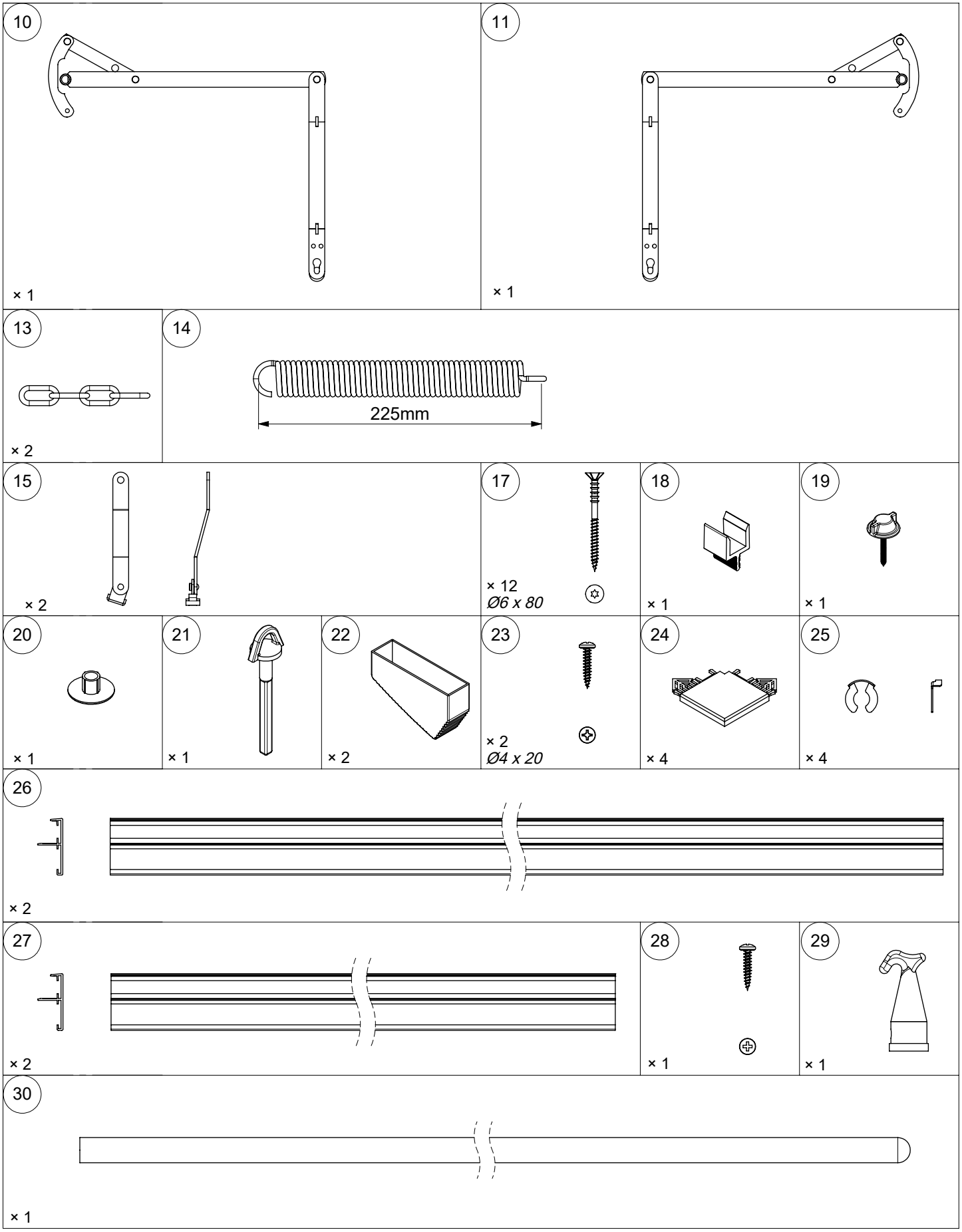
10
× 1
11
× 1
13
× 2
14
225mm
15
× 2
17
× 12
Ø6 x 80
18
× 1
19
× 1
20
× 1
21
× 1
22
× 2
23
× 2
Ø4 x 20
24
× 4
25
× 4
26
× 2
27
× 2
28
× 1
29
× 1
30
× 1

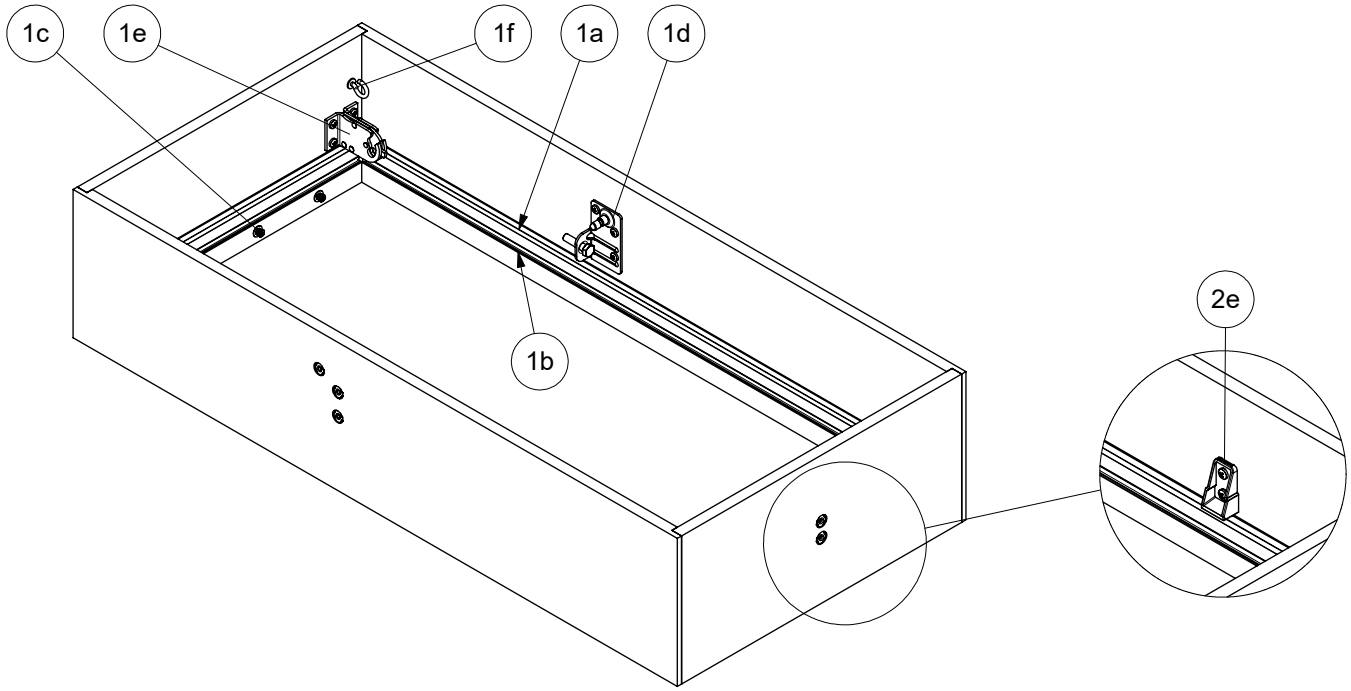
1c
1e
1f
1a
1d
1b
2e

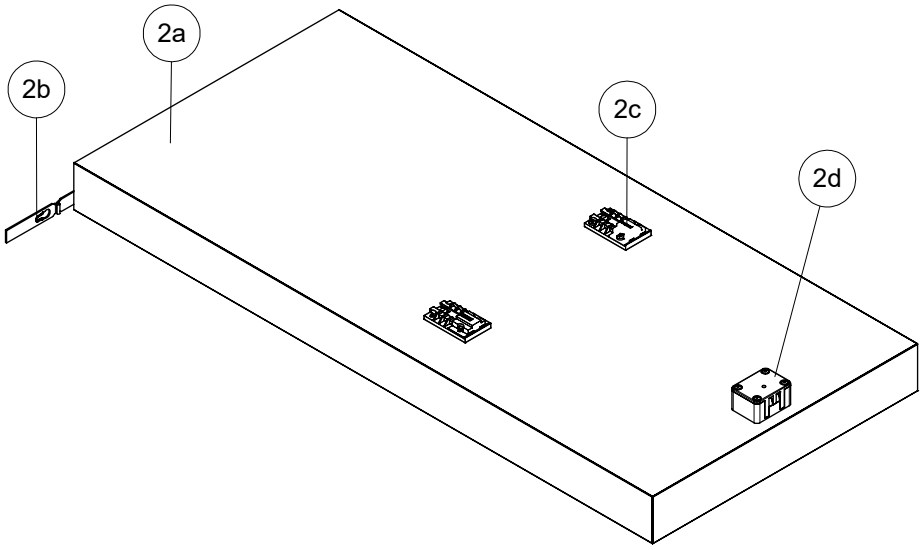
2a
2b
2c
2d

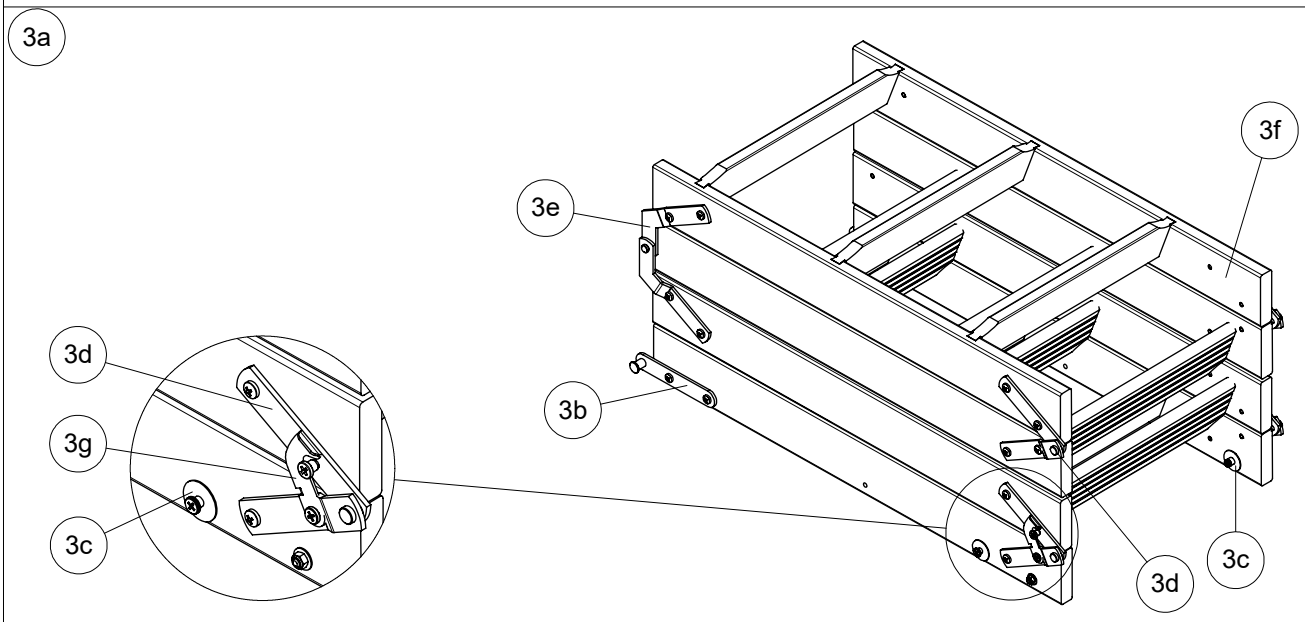
3a
3f
3e
3d
3g
3c
3b
3d
3c

1

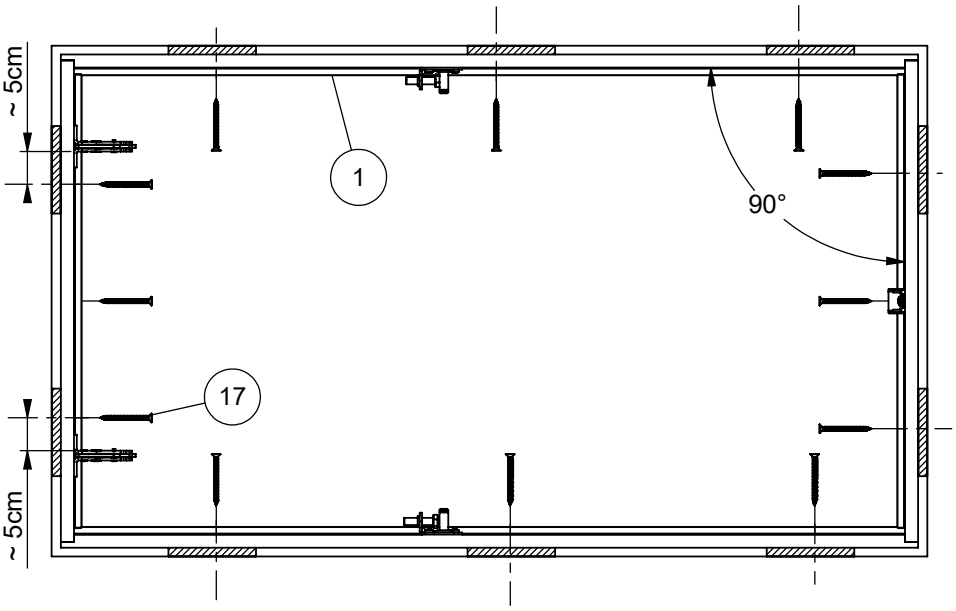
~ 5cm
1
90°
17
~ 5cm

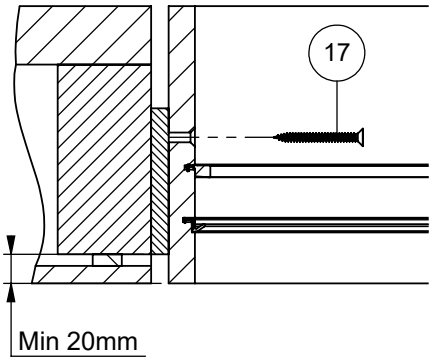
17
Min 20mm

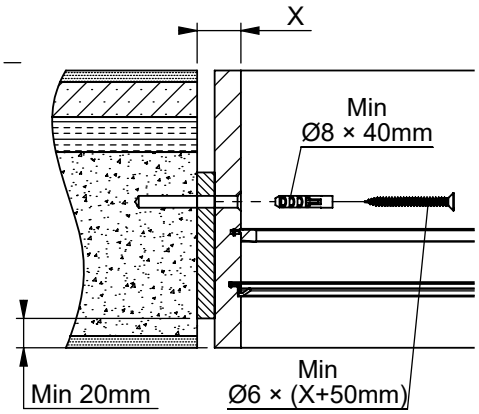
X
Min
Ø8 × 40mm
Min 20mm
Min
Ø6 × (X+50mm)

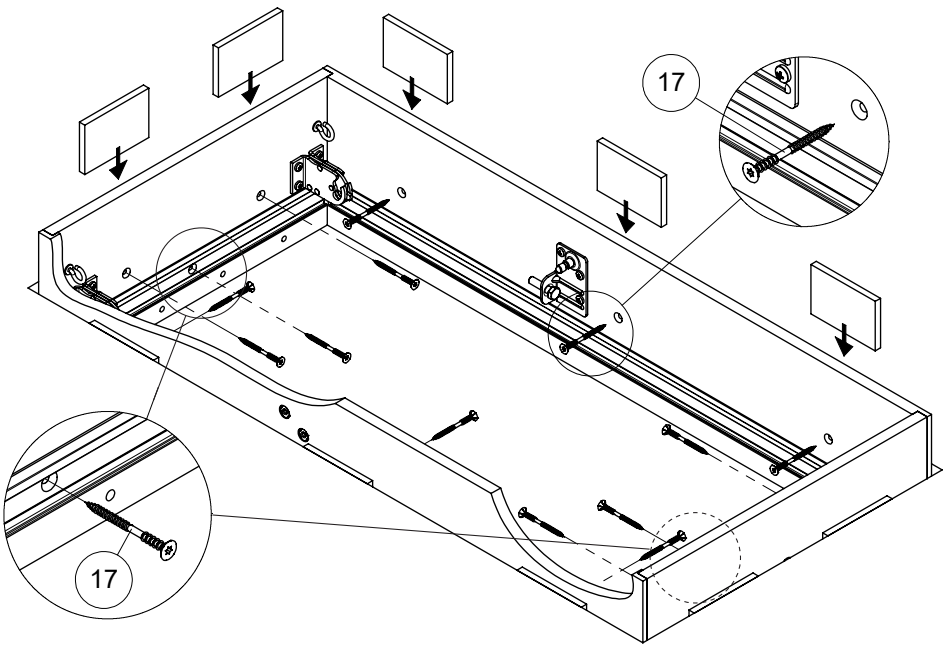
17
17

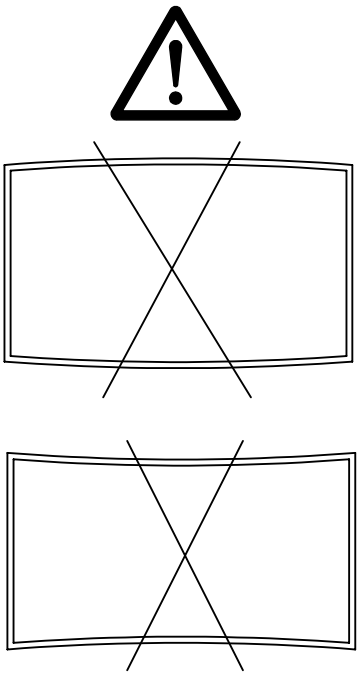

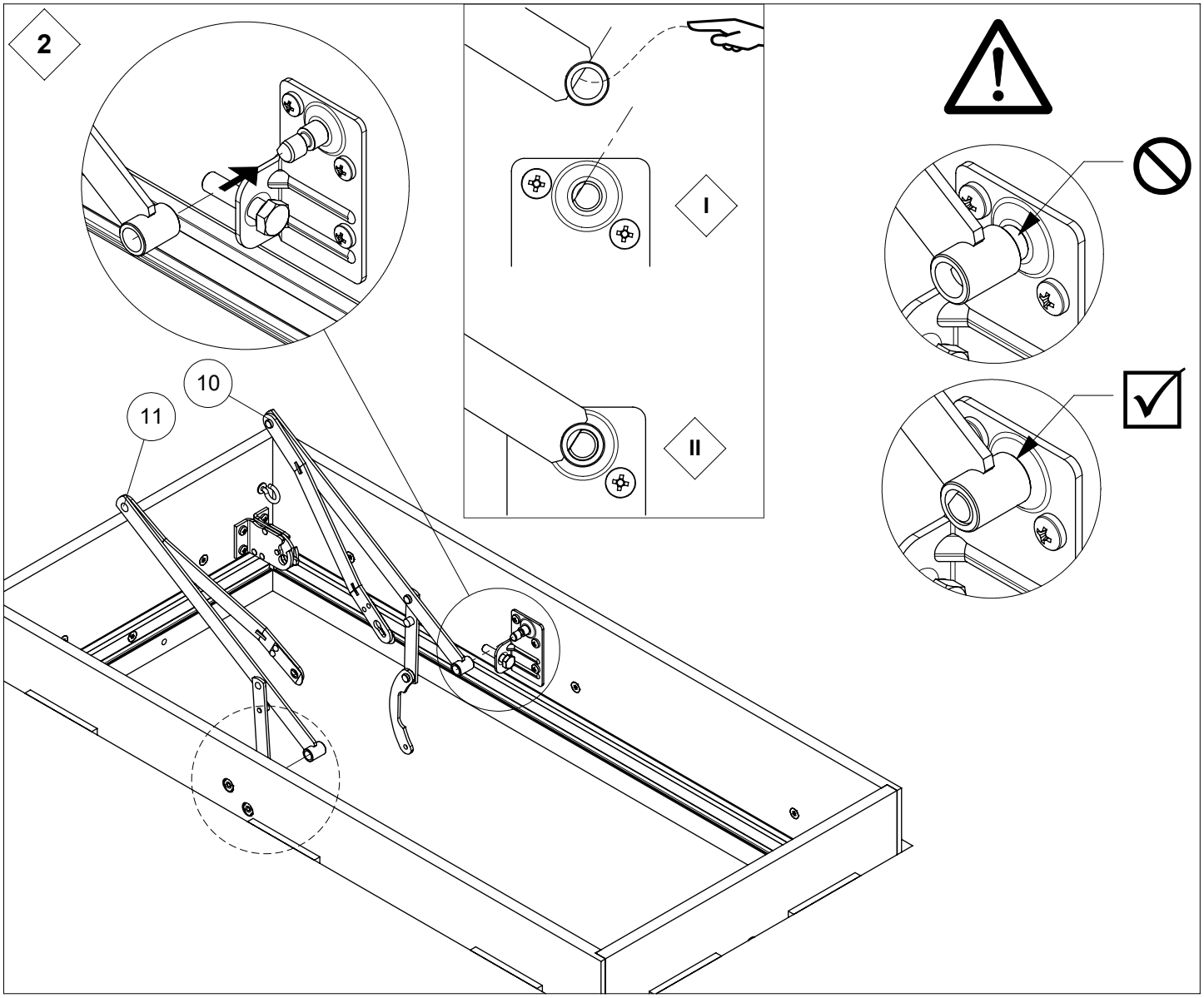
2
10
11
I
II

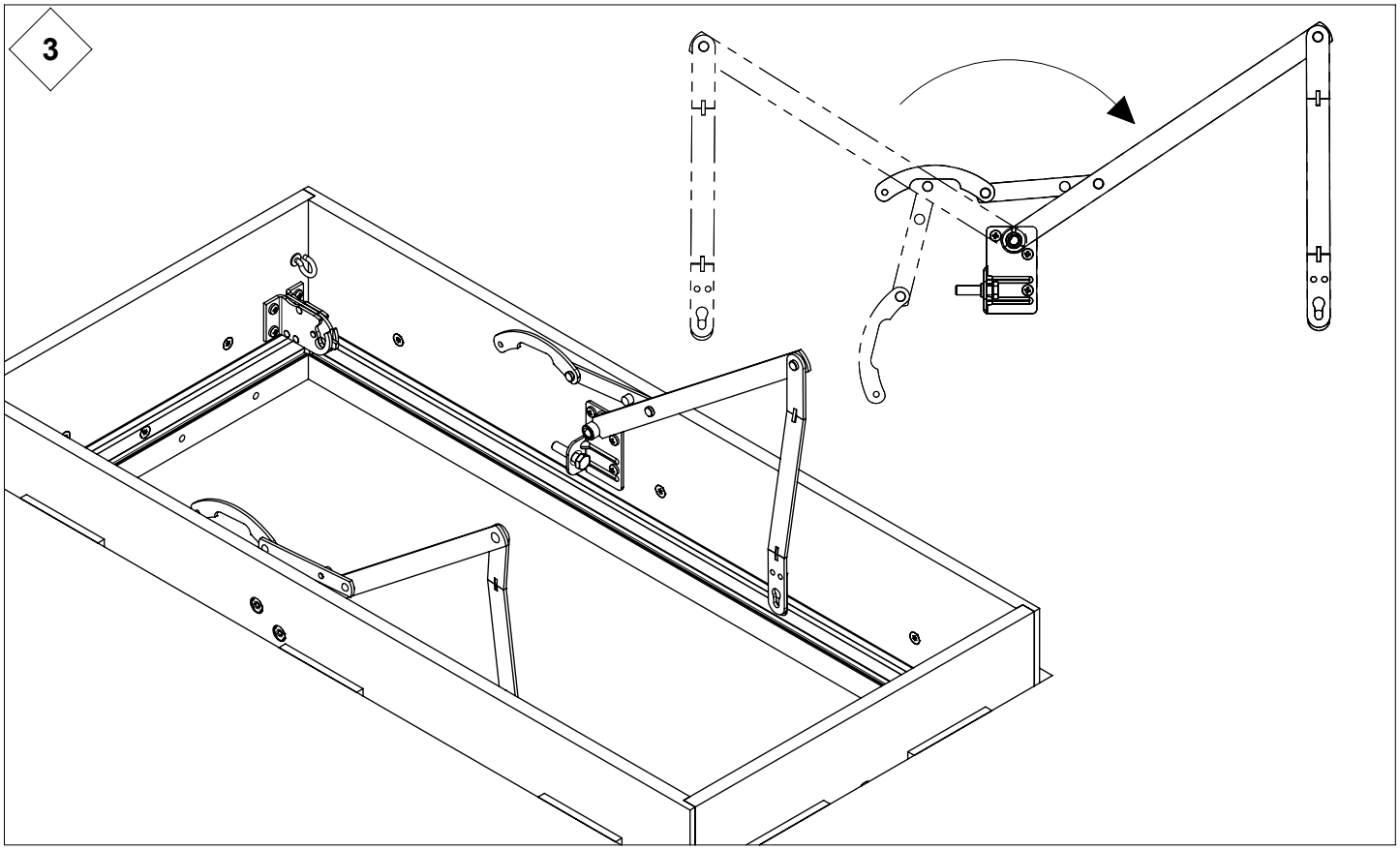
3

4

13	115 x 55 cm	1 st/p
14	115 x 55 cm	

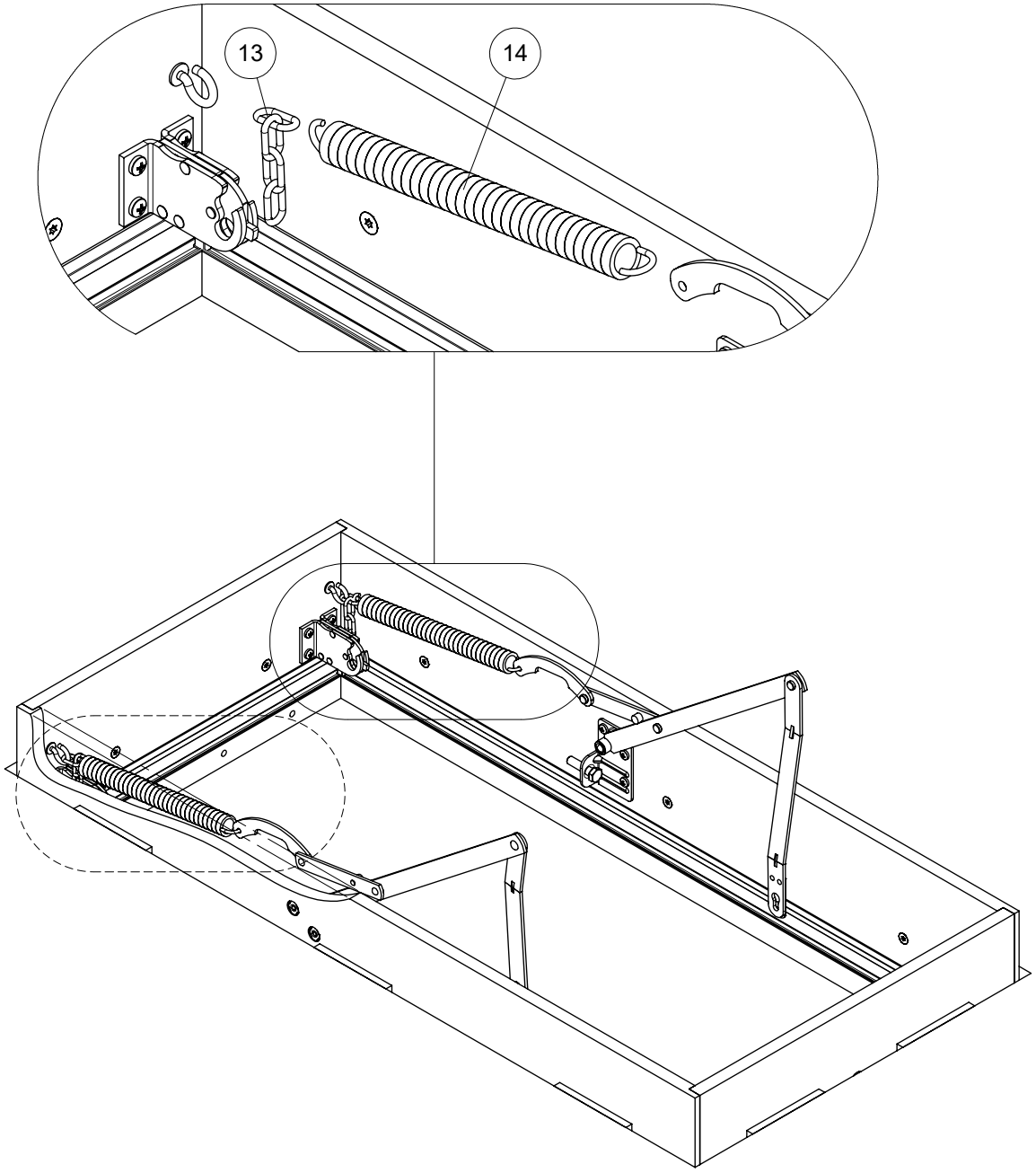

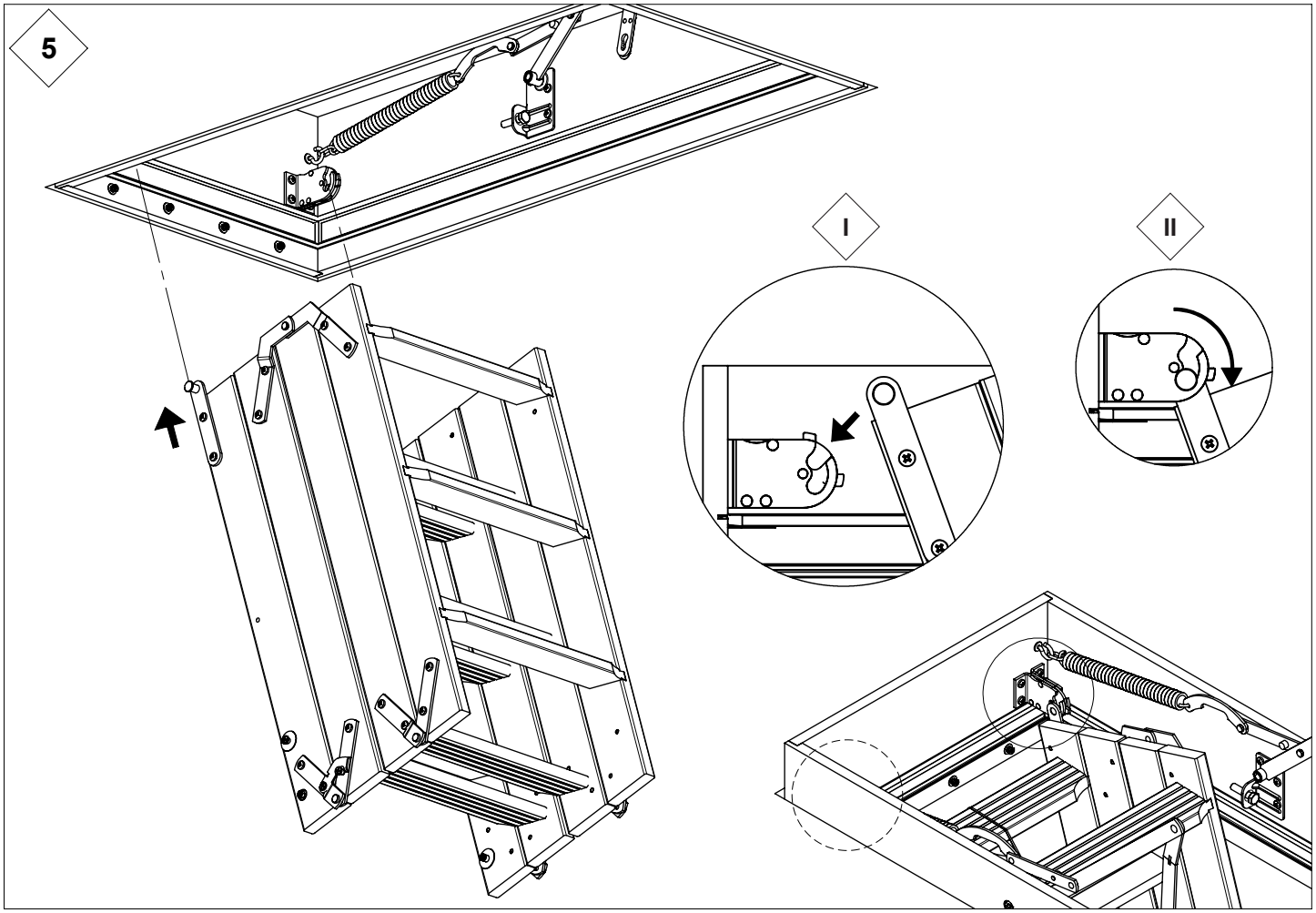
5
I
II

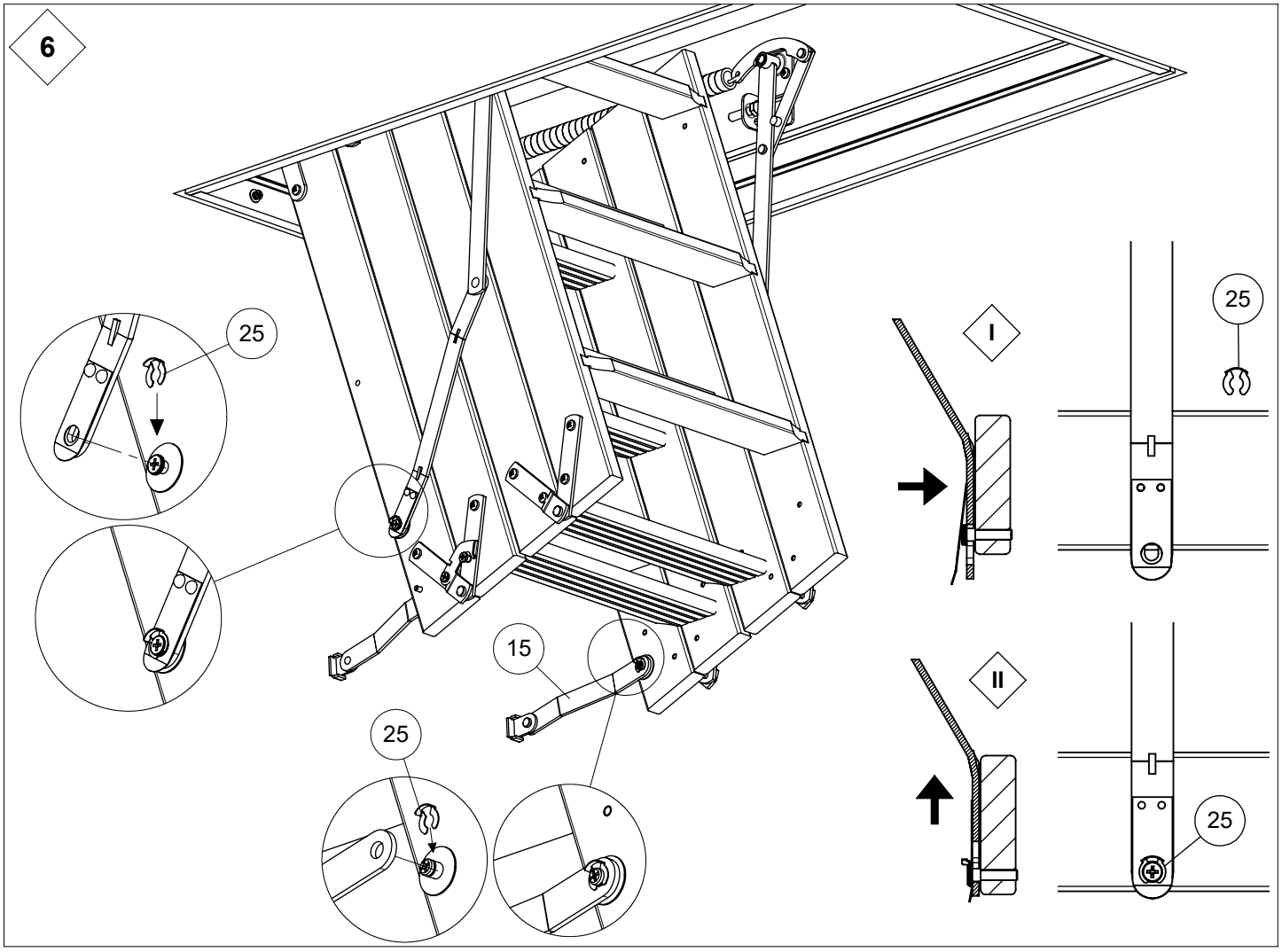
6
25
15
25
I
II
25
25

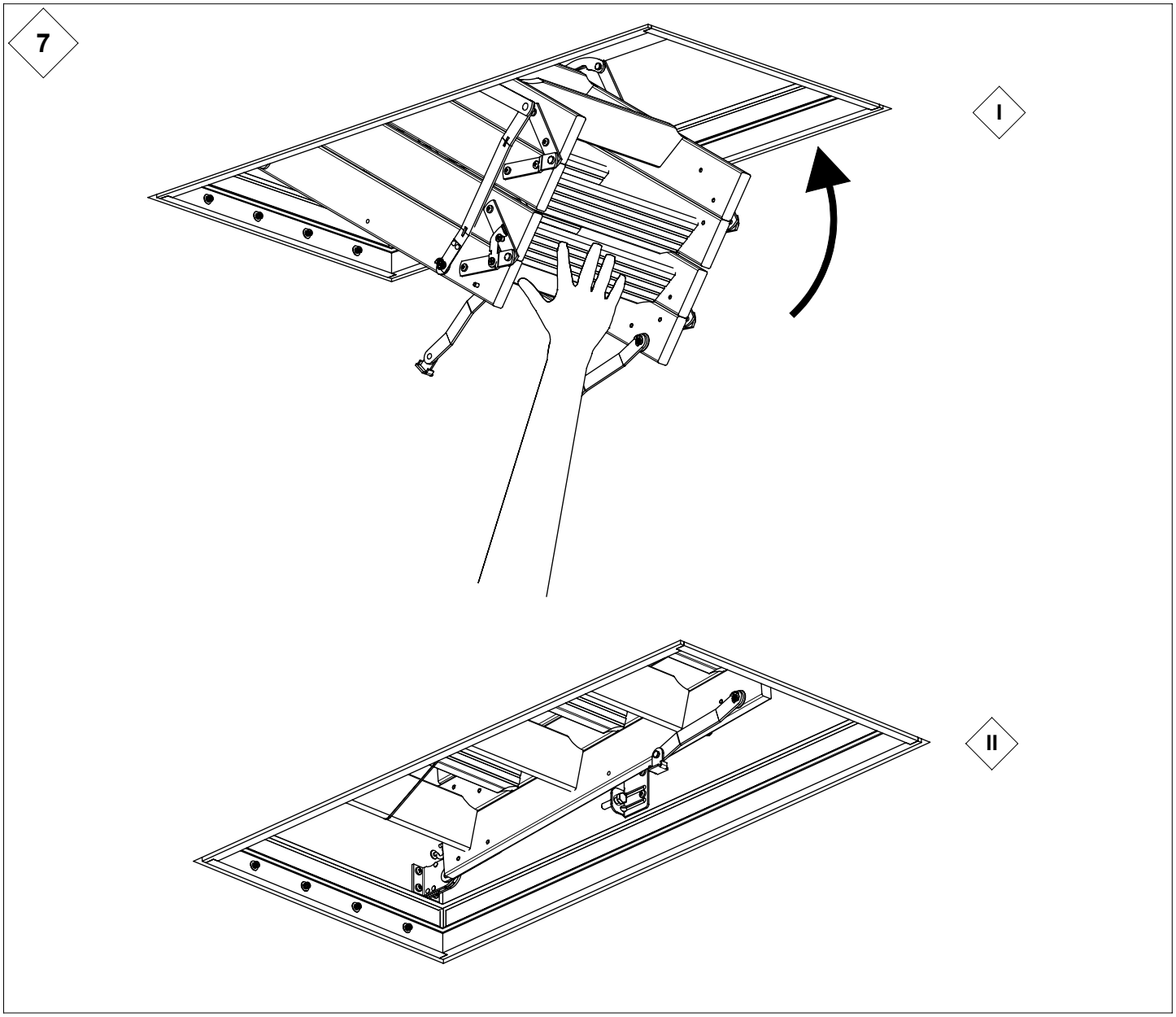
7
I
II

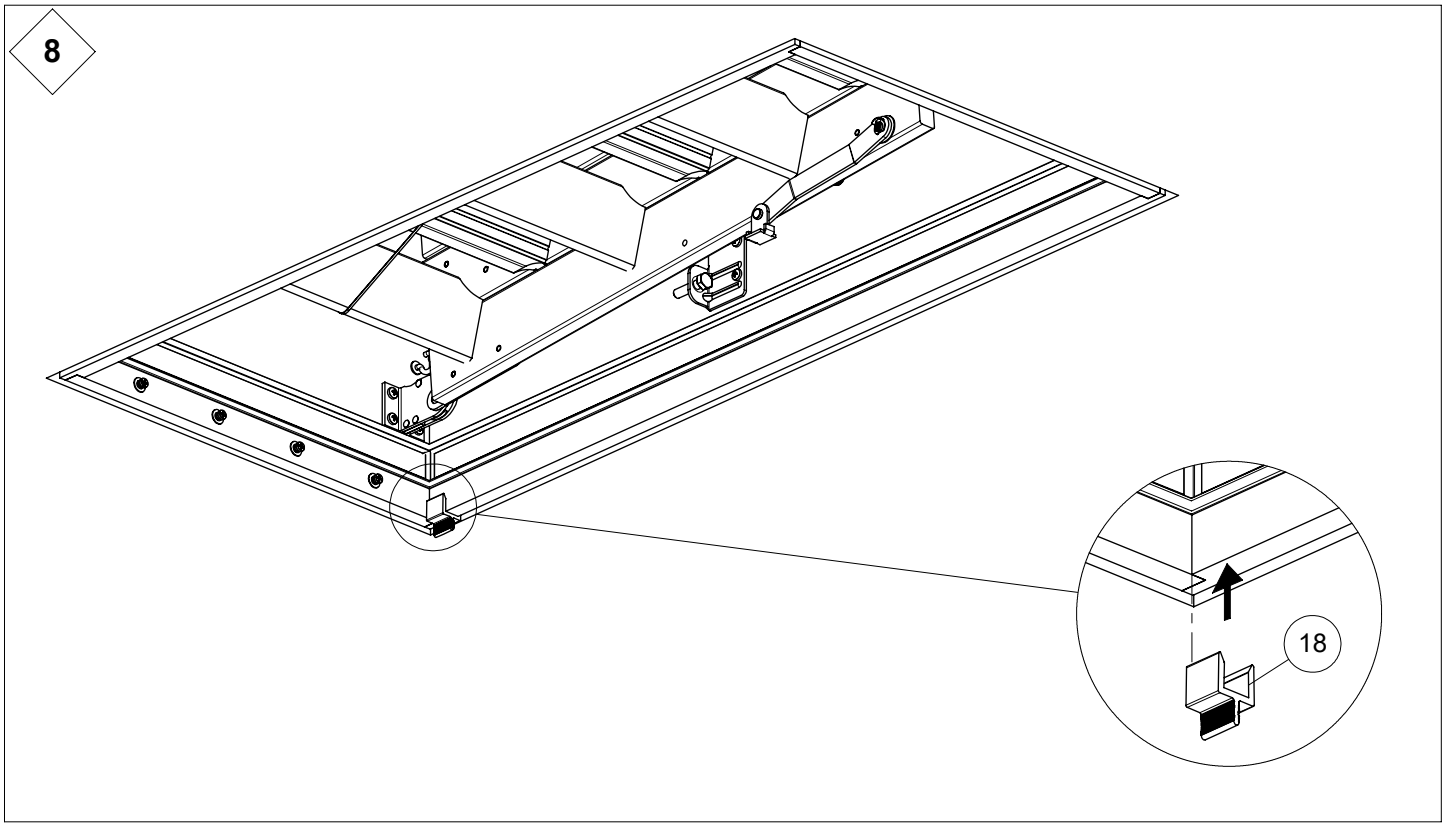
8
18

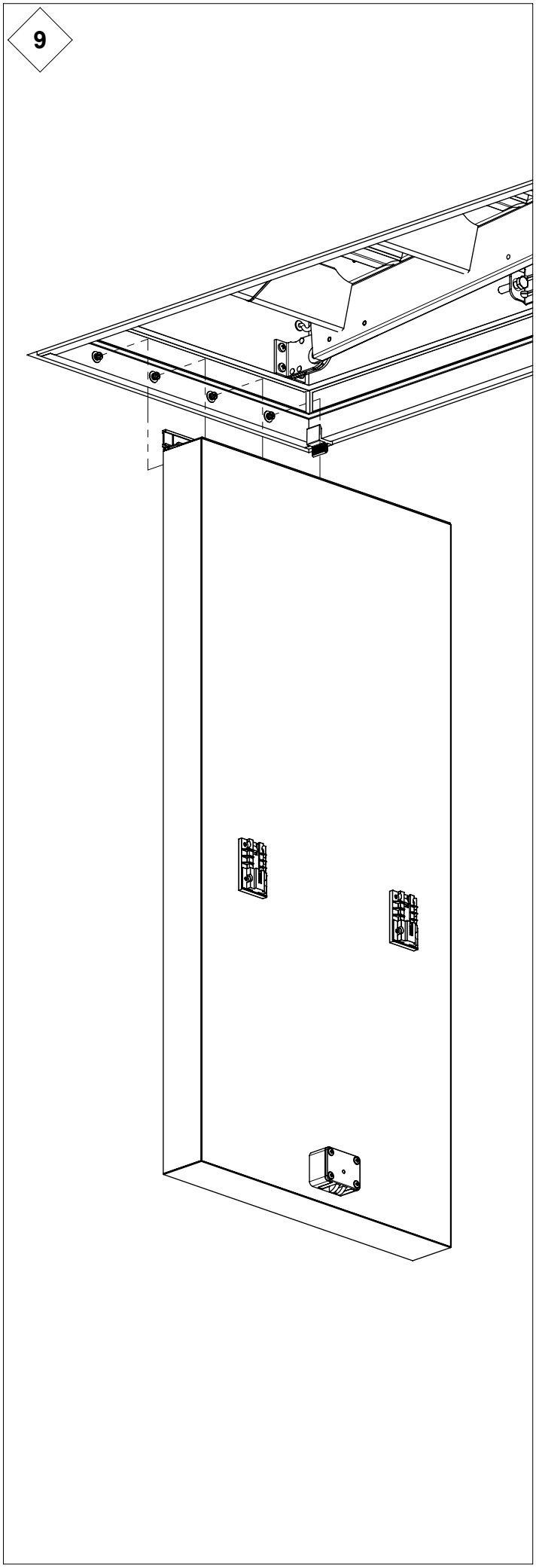
9

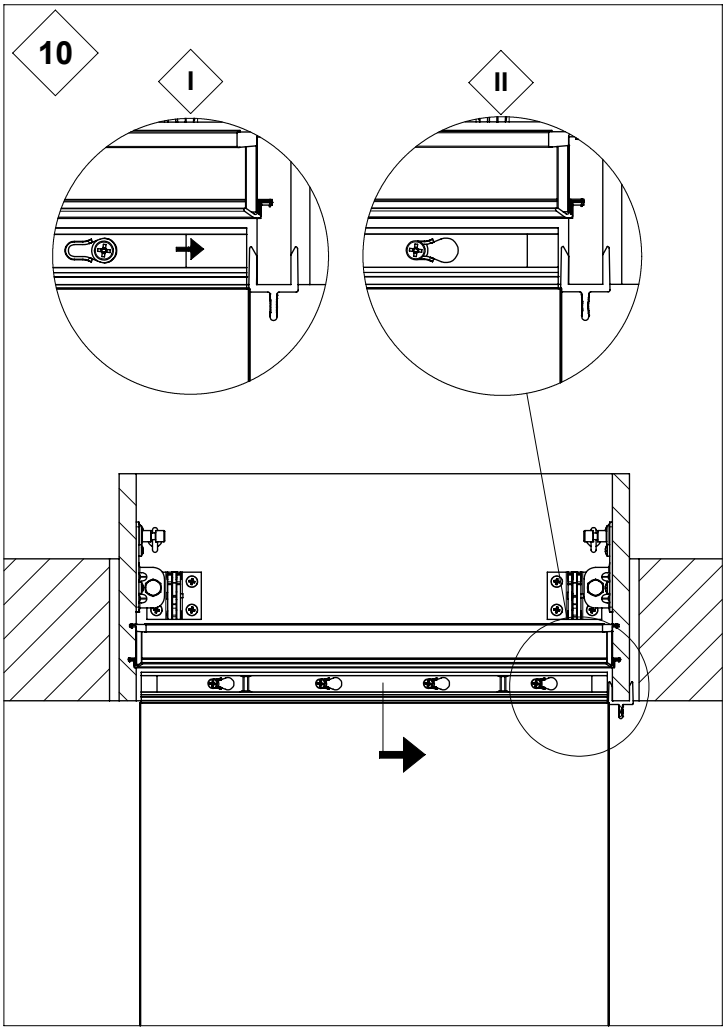
10
I
II

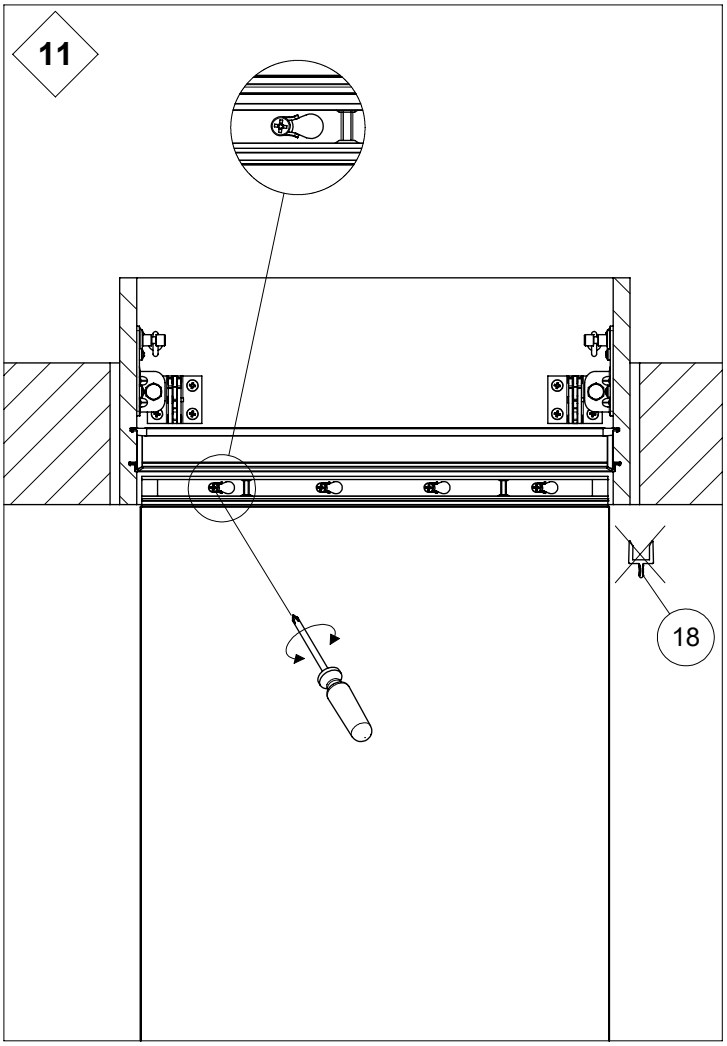
11
18

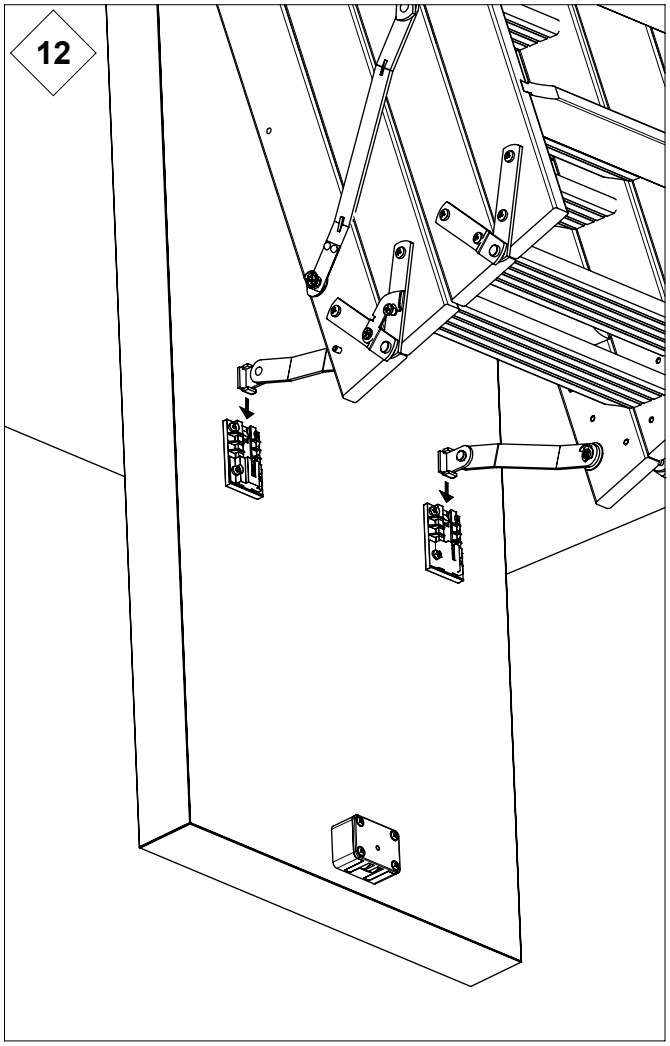
12

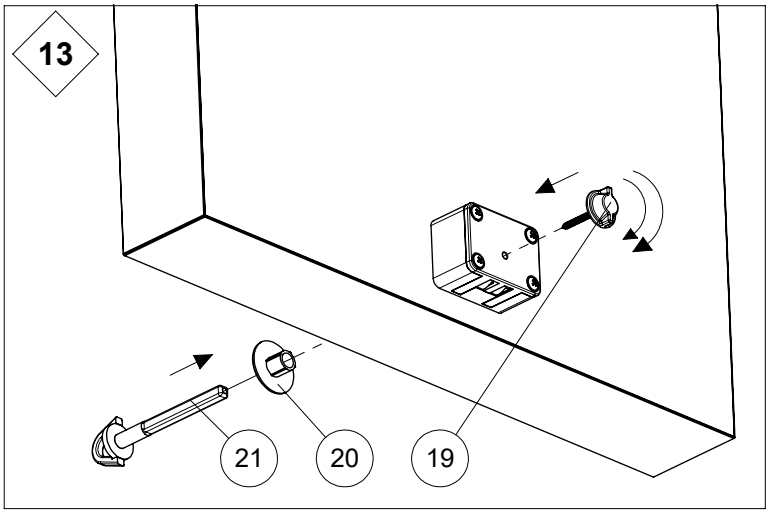
13
21
20
19

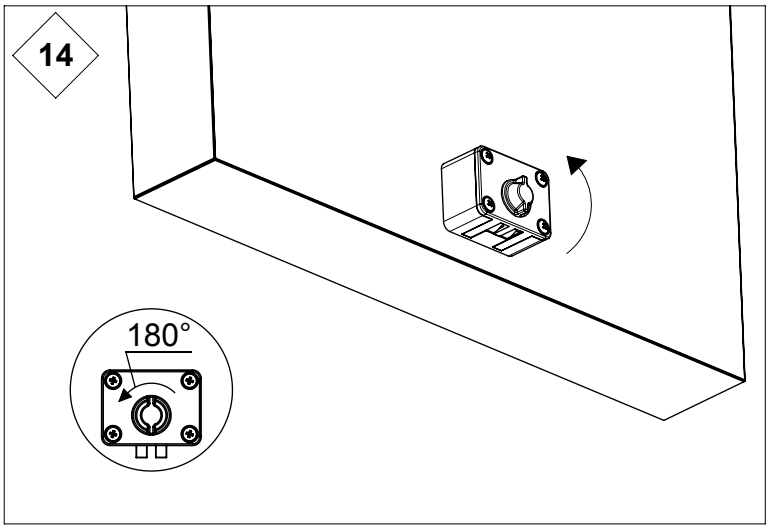
14
180°

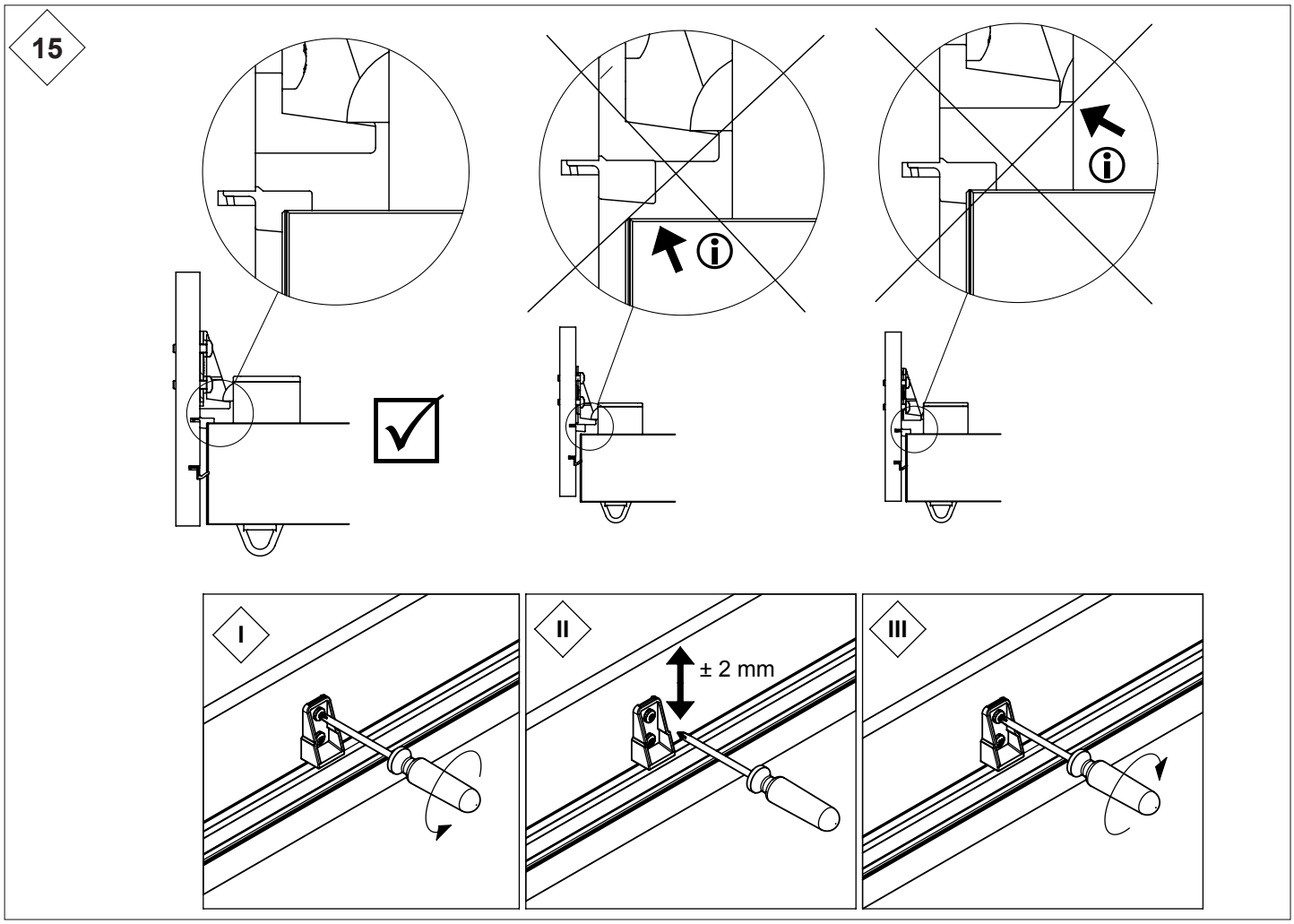
15
I
II
± 2 mm
III

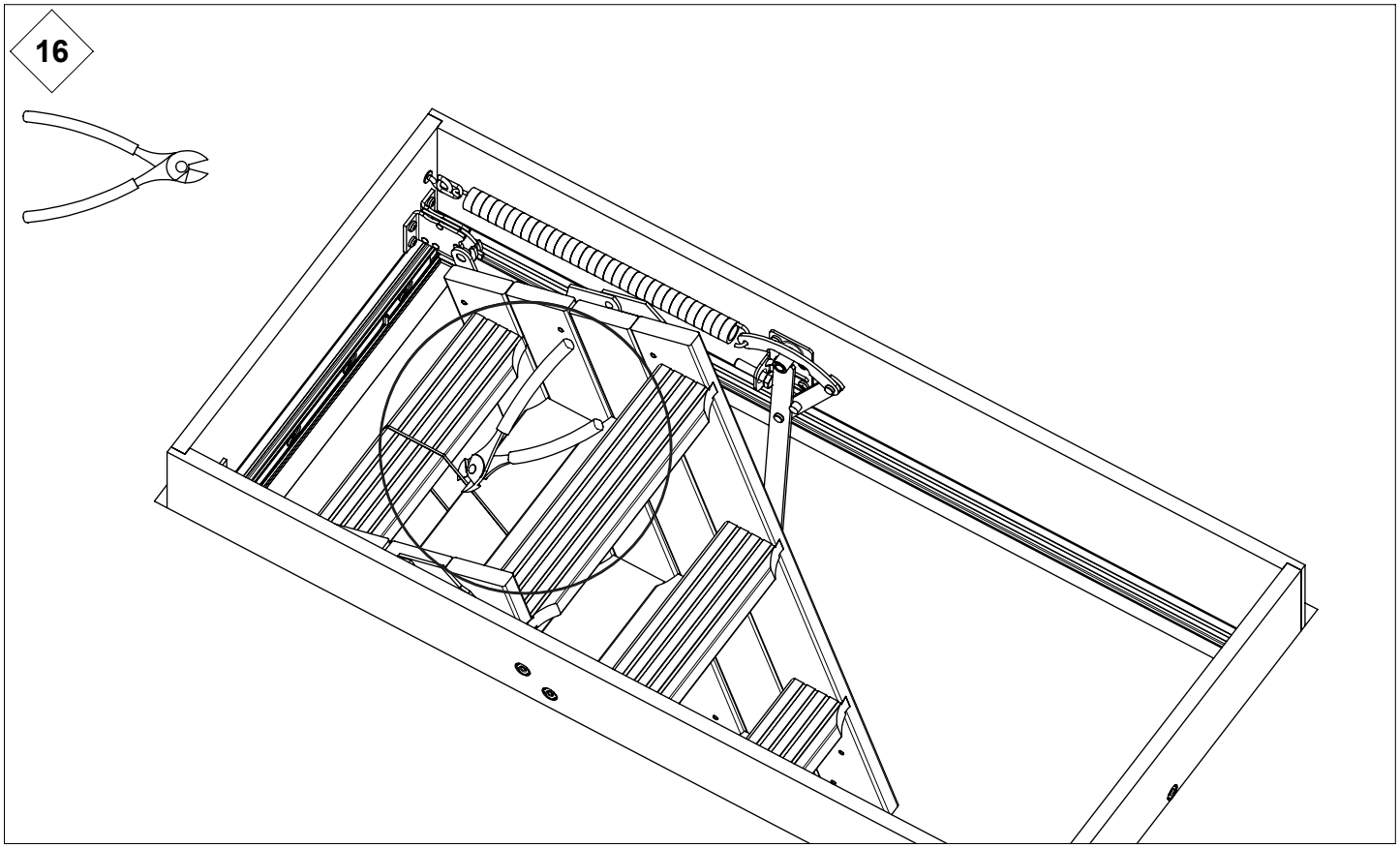
16

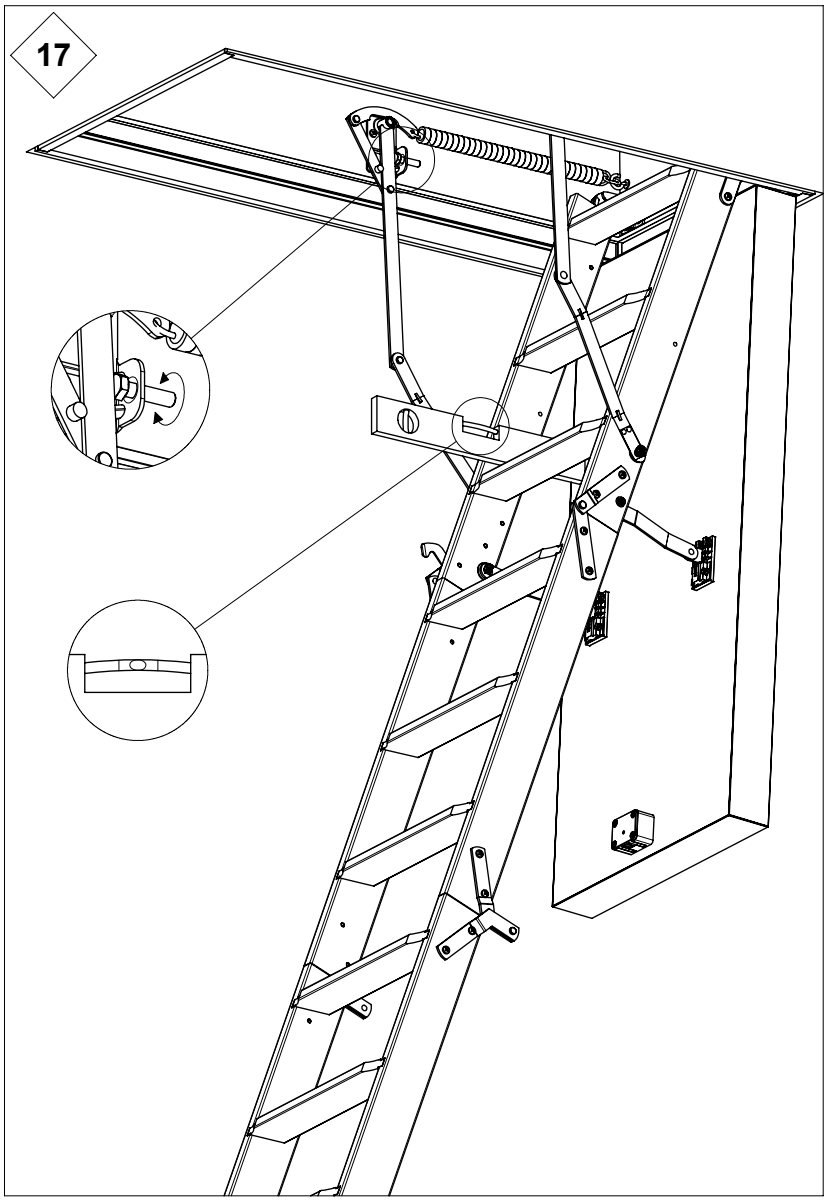
17

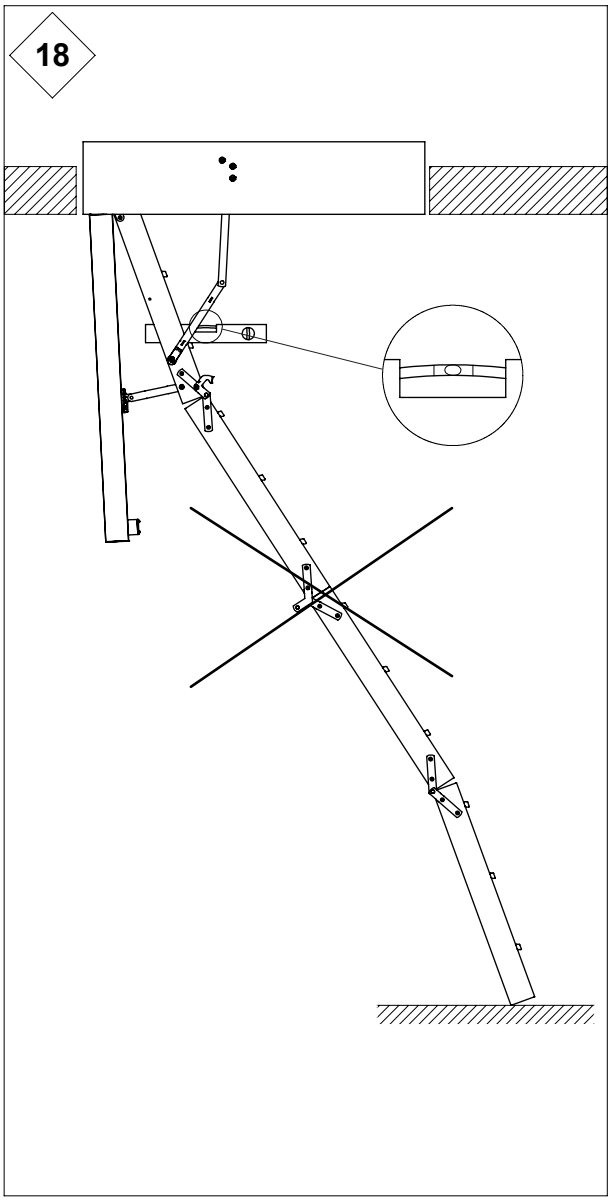
18

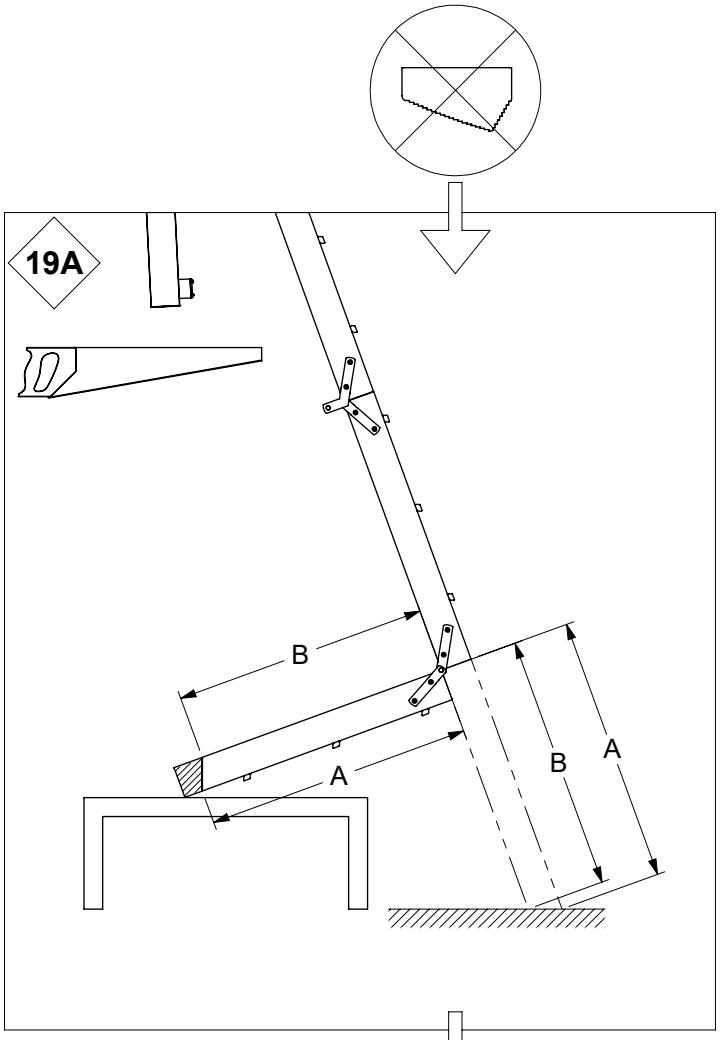
19A
B
A
B
A

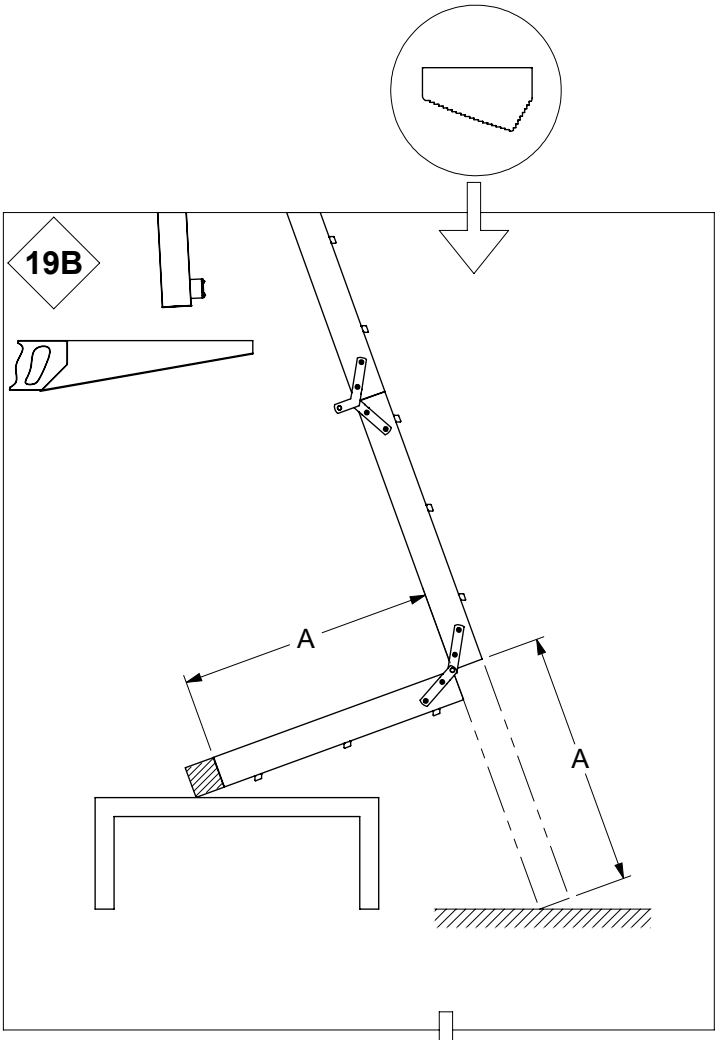
19B
A
A

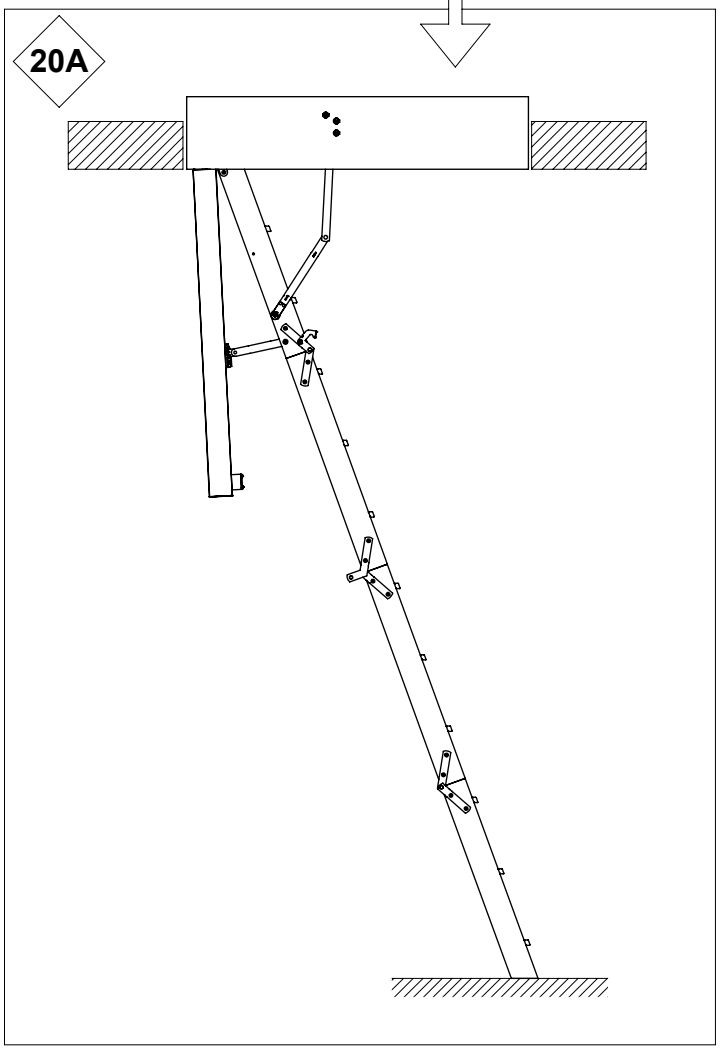
20A

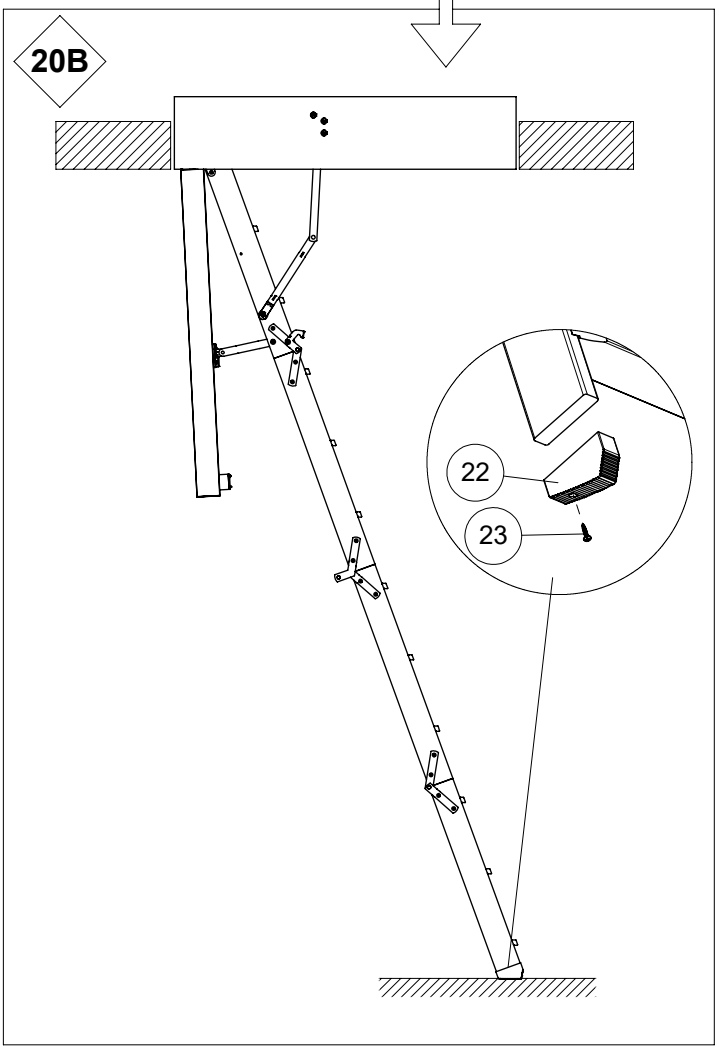
20B
22
23

21

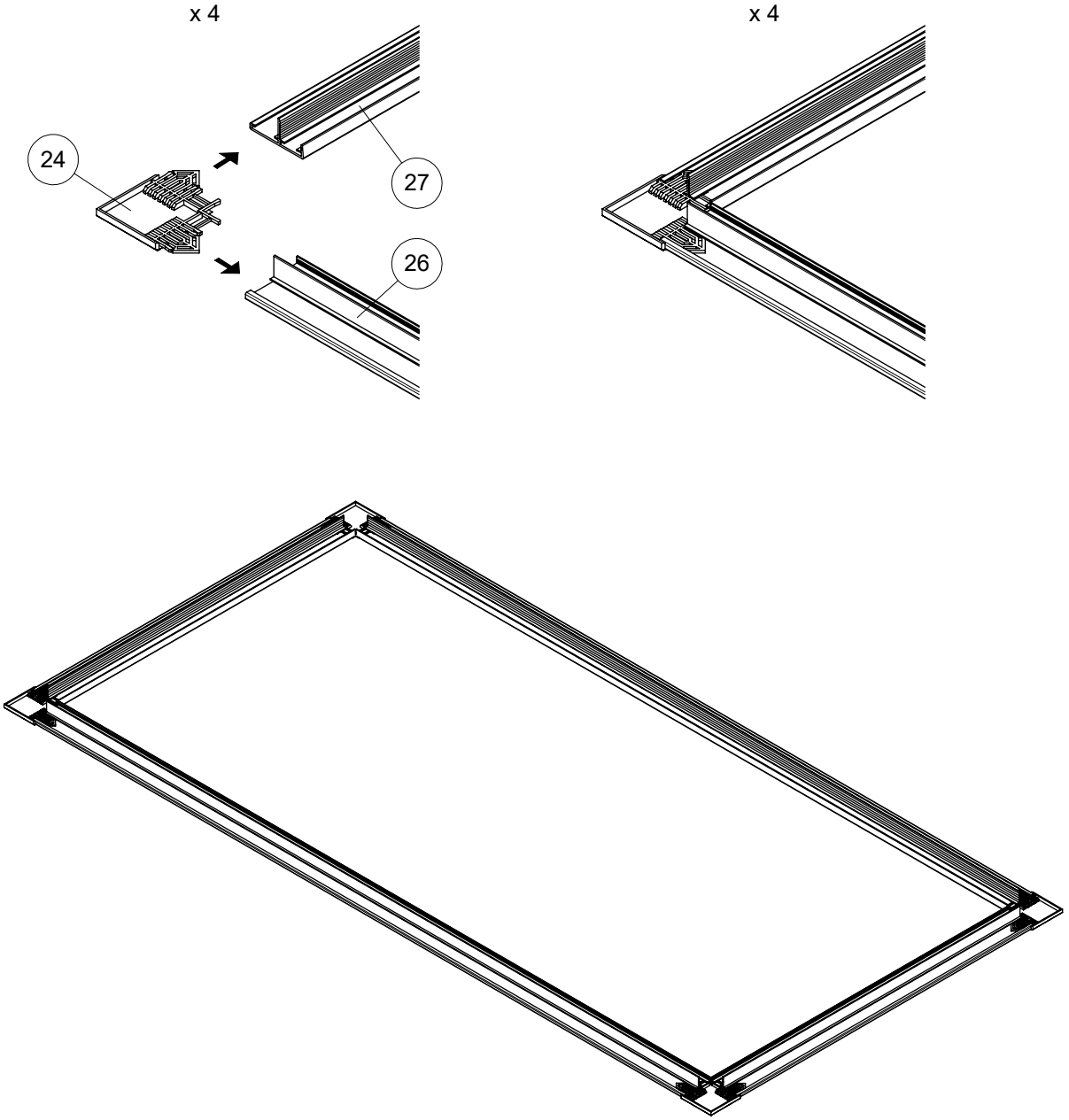
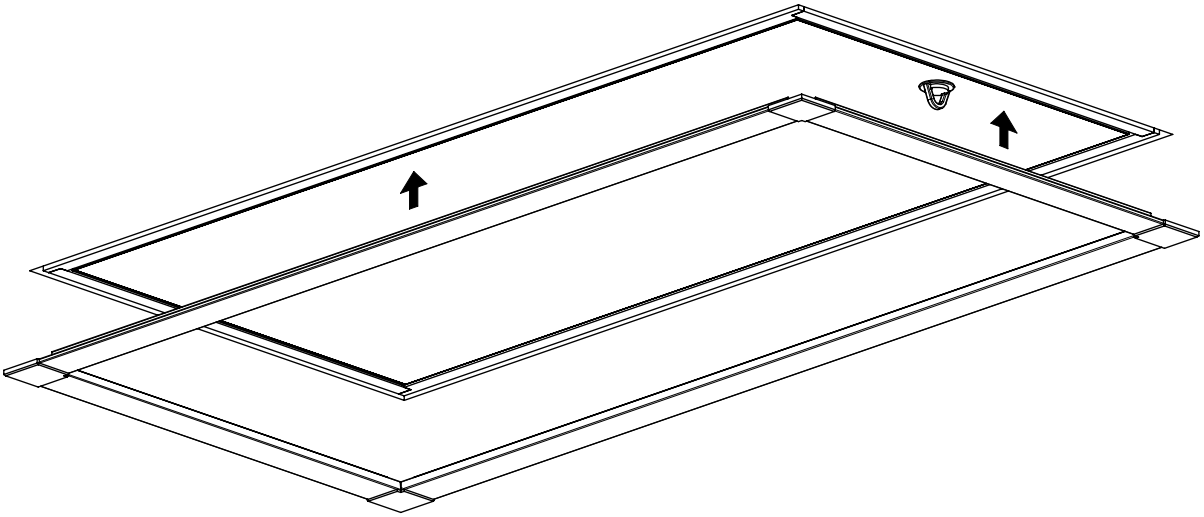
22